BABE RUTH LEAGUE

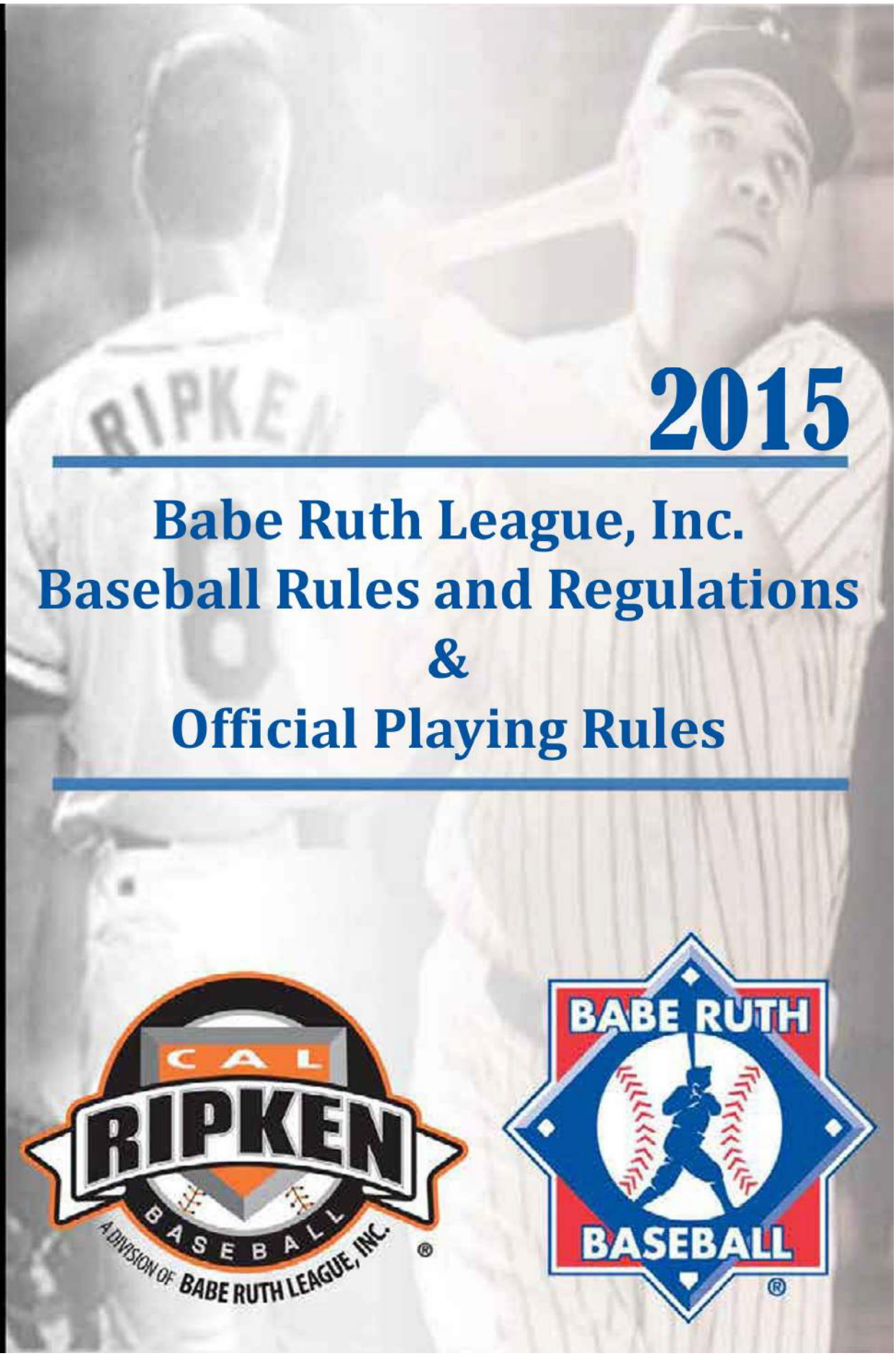

2015

Babe Ruth League, Inc. Baseball Rules and Regulations & Official Playing Rules

CAL RIPKEN BASEBALL
A DIVISION OF BABE RUTH LEAGUE, INC.

BABE RUTH BASEBALL

Coaches are the key to a positive sport experience

At Babe Ruth League, we believe there is no one single action that can have more of a positive impact on our players than improving the quality and knowledge of managers and coaches. Babe Ruth League believes that effective youth coaches are properly trained to focus on children's baseball experiences and less on winning games.

Babe Ruth League Coaching Education Program

To provide this training, Babe Ruth League and Ripken Baseball have partnered with **Human Kinetics Coach Education** to deliver **online coaching courses** for Babe Ruth League and Ripken Baseball coaches.

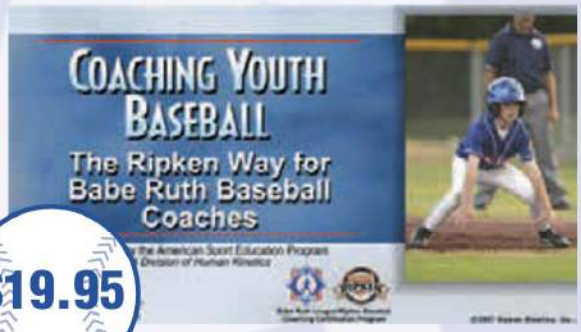

$19.95

$24.95

All rostered coaches must complete either the introductory online course or the advanced online course to meet the Babe Ruth League coaching education requirement.

We appreciate your commitment to be a Babe Ruth League coach and a positive influence on our young athletes. Register for your course today!

BABE RUTH LEAGUE

HUMAN KINETICS Coach Education

CAL RIPKEN BASEBALL
A DIVISION OF BABE RUTH LEAGUE, INC.

www.BabeRuthCoaching.org

STEVEN M. TELLEFSEN, President/CEO
JOSEPH M. SMIEGOCKI, Vice President/Operations & Marketing
ROBERT P. FAHERTY, JR., Vice President/Commissioner
ROBERT A. CONNOR, Commissioner
DONNA J. MAHONEY, Controller

INTERNATIONAL HEADQUARTERS: 1770 Brunswick Pike • P.O. Box 5000
Trenton, NJ 08638 • 800-880-3142 • Fax 609-695-2505
Email: info@baberuthleague.org

For additional information please visit:
www.baberuthleague.org

Copyright 2015 Babe Ruth League, Inc.

MISSION STATEMENT OF BABE RUTH LEAGUE, INC.

The Babe Ruth Baseball/Softball program, using regulation competitive baseball and softball rules, teaches skills, mental and physical development, a respect for the rules of the game, and basic ideals of sportsmanship and fair play. In all aspects, Babe Ruth League, Inc. is committed to providing our participants the very best educational, sports experience possible. It is our fundamental belief that every child with a desire to play baseball or softball be afforded that opportunity.

The Sportsmanship Code of Babe Ruth League

Develop a strong, clean, healthy body, mind and soul.
Develop a strong urge for sportsmanlike conduct.
Develop understanding of and respect for the RULES.
Develop courage in defeat, tolerance and modesty in victory.
Develop control over emotions and speech.
Develop spirit of cooperation and team play.
Develop into real, true CITIZENS.

Copyright, 1954 by Babe Ruth League, Inc.

FOREWORD

Babe Ruth League, Inc. (BRL) is a non-profit, educational organization dedicated to developing better citizens by providing properly supervised baseball competition for players 4 through 18 years of age. Established in 1951 and incorporated just one year later, there are now over 50,000 teams competing in over 10,000 leagues in the United States and Canada. In addition, BRL, Inc., collaborates to showcase global play in the post-season.

The primary reason for the success of the organization is in its mindful and modest adaptation of the Official Baseball Rules. The rules and regulations herein have been established through a democratic process with the guidance of professional recreation directors, high school athletic authorities and college coaches.

The foundation of the BRL organization is the 13-15 Division of Babe Ruth Baseball played on a regulation baseball diamond. Selection of this age grouping on the regulation-size infield was originally founded to meet the unmet need identified by amateur baseball authorities and community leaders.

The past 64 seasons clearly endorse this brand of play. It has been proven that under slightly modified regulation baseball rules, developing players rapidly adjust to the regulation diamond. Moreover, skills such as running, hitting and throwing, have been found to naturally progress for each individual player.

In 1966, the Babe Ruth 16-18 Division was founded in a testament of more players wishing to continue playing organized baseball, as well as community volunteers ready to provide them with similar adult-supervised competition. With focus on the interest and ability of transitioning players, Babe Ruth League initiated a Prep League for 13-year-old players in 1974 and a Prep League for 16-year-old players in 1994.

Babe Ruth Baseball was called upon again in 1981 to bring its brand of baseball to players 12-and-under. In response, a test-pilot program was initiated in 11 states covering three regions. The positive outcome prompted the Board of Directors to vote to expand this younger division nationwide and into Canada beginning with the 1982 season. It was named the Bambino Division of Babe Ruth League, Inc.

With renewed momentum, and the approach of a new millennium, at its 1999 Annual Meeting, BRL Board of Directors changed the name of the Bambino program to Cal Ripken Baseball, A Division of Babe Ruth League, Inc. (It was inaugurated with the 2000 season).

As in all divisions of Babe Ruth League, Inc., Cal Ripken Baseball strives to play under rules as close to the Official Baseball Rules as possible. However, certain special rules, such as using a 60' or 70' diamond and allowing a maximum number of innings for a pitcher, keep to the accepted standards of safety.

It is the basic intent of Babe Ruth League, Inc. that every candidate be given the opportunity to play in the program within the rules and regulations as established by Babe Ruth League, Inc. Each league must advertise registrations, conduct tryouts and draft players. Teams should not be permitted to recruit their own players.

The Bambino Buddy-Ball Division brings the great game of baseball to children with documented special needs. It also welcomes children to the league who wish to serve as "buddies" for the players in this Division. For more information, visit www.baberuthleague.org.

BABE RUTH LEAGUE, INC.
BASEBALL RULES AND REGULATIONS
AND
OFFICIAL PLAYING RULES

NOTATIONS:

CHARTER/FRANCHISE – Babe Ruth League, Inc. has the right to reject any Application for Charter or Declaration of Charter within its sole non-appealable discretion.

RULES – No Babe Ruth League, Inc. rule or regulation may be altered or waived without **WRITTEN** permission of the President, Vice President or Commissioner of Babe Ruth League, Inc. The President of Babe Ruth League, Inc. has the authority to rule on and/or clarify any point not specifically covered in these rules. Adjustments can be made to these rules and regulations in order to accommodate a participant with a documented disability.

WAIVER – It is the obligation of local league Cal Ripken and Babe Ruth presidents for all waiver requests to originate with their district commissioner. All waiver requests must be submitted in writing and must include the approval and signature of the local league president, the district commissioner, the state commissioner and the regional commissioner before it may be considered for approval by Babe Ruth League, Inc. Headquarters.

PRONOUNS – Wherever, in the following pages, "he" or "she" or their related pronouns may appear either as words or as parts of words, they have been used for literacy purposes and are meant in their generic sense to include all humankind or both male and female sexes.

RULES AND REGULATION CHANGES EFFECTIVE FOR 2015

Page 5	**0.01 #5 League Geographical Boundary**
Page 6	**0.01 #6 League Insurance Requirements**
Page 6	**0.01 #7 Background Checks**
Page 18	**BRL Bat Rule All Divisions**
Page 19	**Catcher's Mask Required at any location**
Page 20	**Contact Rule**
Page 21	**Dual Participation and Extra Player (EP)**
Page 28	**Host Family**

2015 BABE RUTH LEAGUE WORLD SERIES SITES

CRL 10 Year Old – Jonesboro, AR	BRL 13-Year-Old – Jamestown, NY
CRL Major/60 – Monticello, AR	BRL 14-Year-Old – Pine Bluff, AR
CRL Major/70 – Aberdeen, MD	BRL 13-15 – Lawrenceburg, TN
	BRL 16-18 – Klamath Falls, OR

INDEX

		Page(s)
0.01	**REQUIREMENTS FOR CHARTER**	5
	Geographical Boundary	5
	Insurance	6
	Background Check	6
0.02	**DEFINITION OF LEAGUE, PLAYER, SPONSOR, PLAYING RULES**	7
	Birth Chart	8
0.03	**JURISDICTION**	9
0.04	**BIRTH DOCUMENTS, ROSTERS, SCHEDULE, SCOREBOOKS, COACHING EDUCATION**	9
0.05	**TEAM COMPOSITION**	10
0.06	**PITCHING LIMITATIONS**	11
0.07	**PLAYER ELIGIBILITY**	12
0.08	**PROTESTS AND RULE INTERPRETATIONS**	12
	RE-Entry Rule and Explanation	12
	Local League and Tournament Play Special Rules and Regulations	17
	Official Baseballs	18
LOCAL LEAGUE OPTIONS		21
11.00	**BABE RUTH LEAGUE, INC. TOURNAMENT REGULATIONS**	23
11.01	**LEAGUE ELIGIBILITY**	23
11.02	**TEAM COMPOSITION**	23
11.03	**PLAYER ELIGIBILITY**	24
11.04	**DOCUMENTS**	24
11.05	**PLAYING RULES**	25
	Determination of Pool Play Standings	25
11.06	**JURISDICTION**	27
12.00	**BABE RUTH LEAGUE, INC. POWERS OF DISTRICT, STATE AND REGIONAL COMMISSIONERS**	29
BABE RUTH LEAGUE, INC. BOARD OF DIRECTORS		31
OFFICIAL PLAYING RULES		32-86
SPORTMANSHIP CODE OF BRL		1
OFFICIAL MLB PLAYING RULES INDEX		95

0.00 BABE RUTH LEAGUE, INC. – BASEBALL LOCAL LEAGUE REGULATIONS

0.01 REQUIREMENTS FOR CHARTER

1. Application for Charter must be submitted to Babe Ruth League, Inc. Headquarters and approved. Applications must include the annual registration fee per team as follows:

Cal Ripken – Major	$20.00	13-15 Division	$20.00
Cal Ripken – Minor	15.00	13-Prep	20.00
Cal Ripken – Rookie	15.00	16-18 Division	25.00
Cal Ripken – T-Ball	15.00	16-Prep	25.00

2. All leagues must apply for charter on or before May 15, 2015.
3. All chartered leagues may add teams after registration merely by filing team registration fees with Babe Ruth League, Inc. Headquarters. Players, managers and coaches on teams added after June 30, 2015 are not eligible for tournament play.
4. Leagues chartered by Babe Ruth League, Inc. shall thereby become subject to the powers and jurisdiction of District, State and Regional Commissioners within whose limits such leagues operate. Babe Ruth League, Inc. has the right to refuse any charter with or without cause. All Babe Ruth leagues are subject to and must adhere to the laws of the state in which they operate.
5. State Commissioners shall approve geographical boundaries established by each league in conjunction with the District Commissioner in whose district that league exists and operates. Appropriate written descriptions, maps or specifications of boundary limitations must be certified by and filed with the State Commissioner and submitted to Babe Ruth League, Inc. for final approval. A player must play within the league's geographical boundaries in which the player resides. This is determined according to the legal residence of the player's parents or legal guardian. **Waivers permitting a player to play outside of his geographical boundaries are not permitted in Babe Ruth Baseball.** (Each age division shall be a separate entity and shall have its own geographical boundaries.) Such geographical boundaries shall be subject to review and adjustment by state regional commissioners and Babe Ruth League, Inc. whenever it is deemed advisable. Geographical boundaries are established to eliminate competition of an undesirable nature, but shall not be established to prevent healthy expansion of teams and leagues within any given area. The only exceptions to the above rule are as follows:

   a. If a player rostered on a Cal Ripken or Babe Ruth League moved outside of that league's geographical boundaries. In this case, the player may finish his playing career in the respective division of that league.

   b. **NEW** – If the physical location of the school where a player attends classes during the traditional academic year is within the boundaries of an established league, the player is permitted to participate in the established league. (Note: This excludes home schools, cyber schools, sports-related schools, sports academies, or an after school situation where a student participates outside of the primary school in which he is enrolled.) Under the school boundary rule, once a player selects to participate in a league where the player is eligible, the player must finish the current season in the same league.

      Players and their parents/guardians are advised that any false statements regarding residency or school attendance may result in the player being declared ineligible to participate in Cal Ripken Baseball or Babe Ruth Baseball league. This action may also result in the disqualification of a player, team or league from regular season and/or tournament play.

6. All leagues and teams must be covered by **group accident insurance** before they will be permitted to try out, practice or start local league play.

Leagues using an insurance program not with Babe Ruth League will be required to name Babe Ruth League, Inc. as additional insured and provide that certificate prior to charter approval.

All leagues and teams must be covered by **commercial general liability insurance** before they will be permitted to try out, practice or start local league play.

7. **BACKGROUND CHECKS:** Babe Ruth League, Inc. chartered leagues **are required** to conduct a nationwide **background check** on all Managers, Coaches, Board of Directors, and any other persons, volunteers or hired workers, who provide regular service to the league and/or have repetitive access to, or contact with players. The purpose of these background checks is, first and foremost, to protect the players. Once a volunteer has successfully completed the background check, it is good for a three (3) year period.

NOTE: Commercial General Liability Insurance must provide coverage for all participants and all league volunteers and have a minimum limit of $1,000,000 coverage.

Information regarding both types of insurance plans is available from Babe Ruth League, Inc.

0.02 DEFINITION OF LEAGUE, PLAYER, SPONSOR, PLAYING RULES

1. LEAGUE. A league shall be composed of not less than four (4) nor more than ten (10) teams to become a chartered/franchised Babe Ruth League. A chartered league may contain more than ten (10) teams provided the league is divided into separate divisions. Each division is to be composed of not less than four (4) nor more than ten (10) teams per division. The teams of one division may play the teams of another division in a straight schedule, or an interlocking league schedule with other Cal Ripken, 13-15 or 16-18 leagues, at the discretion of the League President.
2. PLAYER. All player ages are determined by the birth chart shown on page 8. May 1 in any year shall be the deciding date.
   a) **Cal Ripken** – Any player born prior to May 1, 2011 and on or after May 1, 2002 will be eligible for Cal Ripken Baseball League competition – Season of 2015.
   13-15 – Any player born prior to May 1, 2002 and on or after May 1, 1999 will be eligible for Babe Ruth 13-15 League competition – Season of 2015.
   16-18 – Any player born prior to May 1, 1999 and on or after January 1, 1996 will be eligible for Babe Ruth 16-18 League competition – Season of 2015.

IF A PLAYER'S AGE IS LISTED AS 3 ON THE BIRTH CHART THE PLAYER IS TOO YOUNG AND THEREFORE INELIGIBLE FOR CAL RIPKEN BASEBALL COMPETITION. IF A PLAYER'S AGE IS LISTED AS 13 ON THE BIRTH CHART THE PLAYER IS TOO OLD AND THEREFORE INELIGIBLE FOR CAL RIPKEN BASEBALL COMPETITION.

NOTE: Relative to the 12-Year-Old Swing Player – See Local League Options.

IF A PLAYER'S AGE IS LISTED AS 12 ON THE BIRTH CHART THE PLAYER IS TOO YOUNG AND THEREFORE INELIGIBLE FOR BABE RUTH LEAGUE 13-15 COMPETITION. IF A PLAYER'S AGE IS LISTED AS 16 ON THE BIRTH CHART THE PLAYER IS TOO OLD AND THEREFORE INELIGIBLE FOR BABE RUTH LEAGUE 13-15 COMPETITION.

NOTE: Relative to the 15-Year-Old Swing Player – See Local League Options.

IF A PLAYER'S AGE IS LISTED AS 15 ON THE BIRTH CHART THE PLAYER IS TOO YOUNG AND THEREFORE INELIGIBLE FOR BABE RUTH LEAGUE 16-18 COMPETITION. IF A PLAYER'S AGE IS LISTED AS 19 ON THE BIRTH CHART THE PLAYER IS TOO OLD AND THEREFORE INELIGIBLE FOR BABE RUTH LEAGUE 16-18 COMPETITION.

b) Babe Ruth League competition shall be restricted to AMATEUR PLAYERS ONLY. Players who have received remuneration for play or other compensation are not eligible. A player once declared ineligible can only be reinstated by his own State Commissioner after due review of the case by the Regional Commissioner and final approval of Babe Ruth League, Inc.

NOTE: Amateur and eligibility status of any Babe Ruth League player shall be determined in accordance with the prevailing rules of the State High School Athletic Association of the state in which the player participates in Babe Ruth League play. Therefore, Babe Ruth Baseball local league and state officials should determine their respective State High School Athletic Association's current rules, regulations and policies governing amateur standing before ruling on any case.

c) It is the basic intent of Babe Ruth League, Inc. every candidate be given the opportunity to play in the program within the rules and regulations as established by Babe Ruth League, Inc. Each league must advertise registrations, conduct tryouts and draft players. Teams should not be permitted to recruit their own players.

3. SPONSOR. Babe Ruth League, Inc. recommends local leagues carefully screen applicants for sponsorship and suggests civic clubs, fraternal organizations, service clubs, etc., as typical examples of the broad field from which sponsors should be selected. Babe Ruth League, Inc. forbids sponsorship by any organization or individual whose activities may be regarded as inimical to the welfare of youth, and, therefore, strongly advises meticulous care in the selection of sponsors. Sponsorship and advertising that meet this criteria is allowed on local league and tournament uniforms.

4. PLAYING RULES. All Babe Ruth League games shall be played according to the Official Baseball Rules 1.00 through 9.05 with the exceptions noted.

BABE RUTH LEAGUE, INC.
BIRTH CHART FOR 2014 – BASEBALL DIVISIONS

	2011	2010	2009	2008	2007	2006	2005	2004	2003	2002	2001	2000	1999	1998	1997	1996
January	4	5	6	7	8	9	10	11	12	13	14	15	16	17	18	19
February	4	5	6	7	8	9	10	11	12	13	14	15	16	17	18	19
March	4	5	6	7	8	9	10	11	12	13	14	15	16	17	18	19
April	4	5	6	7	8	9	10	11	12	13	14	15	16	17	18	19
May	3	4	5	6	7	8	9	10	11	12	13	14	15	16	17	18
June	3	4	5	6	7	8	9	10	11	12	13	14	15	16	17	18
July	3	4	5	6	7	8	9	10	11	12	13	14	15	16	17	18
August	3	4	5	6	7	8	9	10	11	12	13	14	15	16	17	18
September	3	4	5	6	7	8	9	10	11	12	13	14	15	16	17	18
October	3	4	5	6	7	8	9	10	11	12	13	14	15	16	17	18
November	3	4	5	6	7	8	9	10	11	12	13	14	15	16	17	18
December	3	4	5	6	7	8	9	10	11	12	13	14	15	16	17	18

All player ages are determined by the birth chart shown above. May 1 in any year shall be the deciding date.

Season of 2015:

Cal Ripken – Any player born prior to May 1, 2011 and on or after May 1, 2002 will be eligible for Cal Ripken Baseball League competition.

13-15 – Any player born prior to May 1, 2002 and on or after May 1, 1999 will be eligible for Babe Ruth 13-15 League competition.

16-18 – Any player born prior to May 1, 1999 and on or after January 1, 1996 will be eligible for Babe Ruth 16-18 League competition.

Any player born in 1996, 1997 and 1998 is eligible for Babe Ruth Baseball 16-18 Division.
Players born in January, February, March, and April of 1999 must play in the 16-18 Division.

0.03 JURISDICTION

1. All competition, local, district, state, regional, national or international shall be played under the jurisdiction of Babe Ruth League, Inc.
2. The Provinces of Canada and any territories of the United States are considered to be identical with the states of the United States in organization and structure and terminology for these rules.

NOTE: When the term "state" is employed in these rules and regulations, the words "province" or "provincial" and "territory" or "territorial" may be substituted.

0.04 BIRTH DOCUMENTS, ROSTERS, SCHEDULE, SCOREBOOKS

1. Players enrolled on a Cal Ripken Baseball, 13-15 or 16-18 roster must present to their respective League President, before the first local league scheduled game, an original record of birth or a certified copy of original record of birth or Official Babe Ruth League, Inc. laminated I.D. Card, or Babe Ruth League, Inc. electronic I.D. Card provided by Babe Ruth League Headquarter's. Such record of birth must be one of the following documents.
   a. Certificate from the State, County or City Bureau of Vital Statistics, Department of Health, Affidavits of Birth, Baptismal Certificates, Hospital Certificates, School Certificates, Record of Notification of Birth Registration by the Bureau of Census of the U.S. Department of Commerce, United States Naturalization Certification, United States Passport, Babe Ruth League, Inc. officially laminated I.D. Card or Babe Ruth League, Inc. electronic I.D. Card provided by headquarter's or Babe Ruth League Letter of Waiver.

NOTE: Contact Babe Ruth League, Inc. for details on how to obtain Babe Ruth League, Inc. officially laminated or electronic Babe Ruth Player I.D. Cards. Only Official Babe Ruth League, Inc. player ID cards obtained from Babe Ruth Headquarters will be accepted.

   b. In the event of the player's birth not being recorded at the time of birth, a CERTIFIED COPY OF THE DELAYED REGISTRATION of birth will be accepted, providing said registration is filed with Babe Ruth League, Inc., and the State Commissioner is notified prior to the player's first local league scheduled game.
   c. Notification of Birth Registration from the State, County or City Bureau of Vital Statistics, Department of Health, or other recognized birth recording agency. [This is termed "Verification of Birth Registration" in some states and may also be either the standard notification or the birth registration card (short form) issued by the recognized birth recording agency.]

2. No player should ever be embarrassed by this rule. Should there be any difficulty in complying with birth certificate requirements, any league, state organization, parent or guardian may contact Babe Ruth League, Inc. directly regarding a Letter of Waiver prior to a player's first local league scheduled game. Applications for a Babe Ruth League, Inc. official Letter of Waiver shall be accompanied by as much documentation as is available.

NOTE: If this situation exists, it must be taken care of immediately upon a player's entrance into Babe Ruth League.

3. A team roster and league schedule shall be filed with Babe Ruth League, Inc. as well as District and State Commissioners independent of each other on or before the league's first regularly scheduled game. Those leagues which do not start regular season play until after June 30, 2015 must file rosters by that date. League Presidents will certify as to the authenticity of the information submitted and certify as to possession of group accident insurance and league liability insurance. Official online Roster Forms will be furnished through the Babe Ruth League, Inc. DataCenter at www.baberuthleague.org. **Faxed or email rosters will <u>not</u> be accepted.**

NOTE: A league schedule shall consist of each team playing a minimum of 10 games within their league or an interlocking league schedule with other Cal Ripken, 13-15 or 16-18 leagues at the discretion of the League President prior to the start of tournament play. The teams of one division may play the teams of another division in a straight schedule, or an interlocking schedule, at the discretion of the League President. Forfeited games, before such games become regulation, do not count towards this compliance and include no records. An interlocking league schedule must be with teams in their own age bracket.

4. Each league will maintain an official scorebook or books to be completed in detail covering all league games. **<u>These scorebooks must contain Babe Ruth local league games only.</u>** These scorebooks will be needed by the League President to sign the tournament team roster verifying that each player has met the local league season participation requirement – see Rules 11.03,1(d) and 11.04,1(d).
5. Babe Ruth League, Inc. rostered managers and coaches in all Divisions are required to complete coaching education and certification, and a league nationwide background check.

0.05 TEAM COMPOSITION

1. Each team is required to conform to the following regulations:
   a. **Cal Ripken –** Each team shall consist of no less than twelve (12) players or more than fifteen (15) players, a manager and two coaches. Each team shall be composed of not more than eight (8) 12-year-old players.

NOTE: Once a player is selected to play in a major league division he must complete the season within that division.

13-15 — Each team shall consist of no less than twelve (12) players or more than fifteen (15) players, a manager and two coaches. Each team shall include a minimum of three (3) 13-year-old players, and no more than five (5) 15-year-old players.

NOTE: If a League registers with Babe Ruth League, Inc. a minimum of a four team Prep League which takes in the 13-year-old players, each 13-15 year old team shall consist of no more than eight (8) 15-year-old players. The remaining seven (7) players would be either 13- or 14-year-old players. Thirteen-year-old players listed on the league's 13-15 year old team roster may also participate in the Prep League at the local league's option.

16-18 — Each team shall consist of not less than twelve (12) or more than eighteen (18) players, a manager and two (2) coaches. Each team shall include a minimum of three (3) 16-year-old players, and no more than eight (8) 18-year-old players.

NOTE: If a League registers with Babe Ruth League, Inc. a minimum of a four team Prep League which takes in the 16-year-old players, each 16-18 year old team shall consist of no more than twelve (12) 18-year-old players. The remaining six (6) players would be either 16- or 17-year-old players. Sixteen-year-old players listed on the league's 16-18 year-old team roster may also participate in the Prep League at the local league's option.

b. After the registration date of June 30, 2015 a team vacancy may be filled. The league will notify Babe Ruth League, Inc., as well as District and State Commissioners, with the name of the replacement player, manager or coach. Players, managers or coaches registered or re-registered as replacements or traded after June 30th shall not be eligible for tournament competition.

0.06 PITCHING LIMITATIONS

1. A Cal Ripken Baseball pitcher, regardless of age may pitch six (6) innings per calendar week. A Babe Ruth 13-15 pitcher, regardless of age, may pitch seven (7) innings per calendar week.
   a. Rule 0.06-1 applies to all games regardless of when played. This includes rescheduled and make-up games.
   b. If a pitcher delivers one (1) pitch in an inning he shall be charged for one (1) inning pitched.
2. The calendar week of Babe Ruth League, Inc. is Monday through, and including, Sunday.
3. A Cal Ripken Baseball pitcher must have two (2) calendar days rest between pitching assignments if he pitches in more than two innings in any one game. A Babe Ruth 13-15 pitcher must have two (2) calendar days rest between pitching assignments if he pitches in more than three innings in any one game. Each game in which a pitcher pitches is considered an assignment.
4. Games in which an ineligible pitcher has been used as specified in paragraphs 1, 2 and 3 shall be declared forfeited. The withdraw of an ineligible pitcher after the pitcher is announced or after a warm-up pitch is delivered but before that pitcher has pitched a ball to a batter shall not be considered a violation. Babe Ruth League Officials are urged to prevent forfeits.
5. Each game in which a pitcher pitches is considered one (1) "assignment". Therefore, a pitcher in the same game may start out as a pitcher, play another position, and return to the mound and this would still be considered as one (1) assignment.

6. If a game is called before it has become a regulation game and the umpire declares it "no game" the pitching eligibility is the same as it was prior to the beginning of the "no game" situation.
7. Although there are no written restrictions as to the use of pitchers in Babe Ruth 16-18 local league play, Babe Ruth League, Inc. strongly cautions extreme care be used so an individual player is not overextended, i.e., protect the player's arm.

0.07 PLAYER ELIGIBILITY

Games in which an ineligible player has been used, as specified in Rule 0.01, paragraph 5 and Rule 0.02, paragraph 2(a) and (b) shall, at any time upon discovery, be declared forfeited.

0.08 PROTESTS AND RULE INTERPRETATIONS

1. Each league shall adopt rules governing procedure for protesting a game, when a manager claims an umpire's decision is in violation of these rules.
2. All disputes and protests shall be decided by the local League President or by his appointed committee provided the decision does not violate Official Baseball Rules or Babe Ruth League, Inc. Rules and Regulations.
3. Clarifications and interpretations of rules by Babe Ruth League, Inc. will be given only in WRITING, and then only upon WRITTEN request. Babe Ruth League, Inc. will consider facsimiles as writing.

RE-ENTRY RULE AND EXPLANATION

RE-ENTRY RULE (ALL DIVISIONS) – Any of the nine starting players may withdraw and re-enter once provided such player occupies the same batting position whenever he is in the line-up. A substitute who is withdrawn may not re-enter. All pitchers are governed by the provisions of Official Baseball Rule 3.05 if withdrawn while on the mound pitching. The pitcher withdrawn while a batter or base runner may re-enter the game immediately. If the pitcher is removed from the game because of a second trip in the same inning he may re-enter the game in any position with the exception of pitcher.

RE-ENTRY OF USED PLAYER (ALL DIVISIONS) – Babe Ruth League, Inc. will allow re-entry of already used players if all substitutes have been used and injury occurs, or a player is ejected. Selection of this substitute must be made by the opposing manager. This type of re-entry can only take place when an injury prevents a player from continuing in the game or a player is ejected. The injured or ejected player, once removed from the game, cannot re-enter.

NOTE: If a player re-enters illegally as a pitcher, fielder, or runner, there is no penalty except he must be removed from the game immediately when discovered. If he re-enters illegally as a batter, such illegal re-entry is penalized according to Official Baseball Rule 6.07, Batting Out Of Order.

Listed below are interpretations of the above rule:

This rule applies to both local league and tournament play.

Each of the **nine** starting players may be withdrawn from the game and re-entered once.

When re-entered the player must occupy the same batting position as he occupied when starting the game, i.e., a starting player and his substitute cannot be in the game at the same time.

A pitcher withdrawn from the game may re-enter immediately if withdrawn while a batter or base runner, if he was one of the nine starting players. If withdrawn while he is on the mound pitching, his substitute must fulfill Official Baseball Rule 3.05 (b) before he is permitted to re-enter the game.

All other starting players may be withdrawn and re-entered immediately.

A **substitute** withdrawn from the game **can never re-enter** the game. Except when all subs have been used and an injury or ejection occurs.

A substitute may replace a substitute and the starting player may still re-enter for the substitute, i.e., starting player Jones is replaced by substitute Smith; substitute Smith is replaced by substitute Clark. Starter Jones is eligible to replace Clark.

A starting player withdrawn from the game more than once cannot re-enter.

Withdrawal and re-entry takes place only when a player has been removed from the game.

If the pitcher is removed from the game because of a second trip in the same inning, he **may** re-enter the game in any position with the exception of pitcher, if he was one of the nine starting players.

CAL RIPKEN MAJOR 60 FT. BASEBALL DIVISION SPECIAL BASE RUNNING RULE

Rule: When a pitcher is in contact with the pitcher's plate and in possession of the ball and the catcher is in the catcher's box ready to receive delivery of the ball, base runners shall not leave their bases until the ball has been delivered and has reached home plate. Once the catcher has secured the ball and the runner has stopped his forward progress, the runner must immediately return to the base.

The violation by one runner shall affect all other runners.

a. When a base runner leaves the base before the pitched ball has reached home plate and the batter does not hit the ball, the runner is permitted to continue. If a play is made on the runner and the runner is out, the out stands. If said runner reaches safely the base to which he is advancing, all runners must be returned to the base occupied before the pitch was made, and no out results.

b. When a base runner leaves the base before the pitched ball has reached home plate and the batter hits the ball, the base runner or runners are permitted to continue. If a play is made and the runner or runners are put out, the out or outs will stand. If not put out, the runner or runners must return to the original base or bases or to the unoccupied base nearest the one left. In no event shall the batter advance beyond first base on a single or error, second base on a double or third base on a triple. The umpire-in-chief shall determine the base value of the hit ball.

c. When any base runner leaves the base before the pitched ball has reached home plate and the batter bunts or hits a ball within the infield, no run shall be allowed to score. If three runners were on the bases and the batter reaches first base safely, each runner shall advance to the base beyond the one they occupied at the start of the play except the runner who occupied third base, which runner shall be removed from the base without a run being scored. **NOTE:** See exception following this rule.

NOTE: When there is a base running violation, the umpire should signal such infraction by indicating a delayed dead ball. **EXCEPTION:** If at the conclusion of the play there is an open base, paragraphs (a) and (b) will apply.

CAL RIPKEN BASEBALL – MINOR LEAGUE RULES AND REGULATIONS

1. A Minor League, which includes Rookie League and T-Ball, can only be started if the local parent program is an accepted and chartered Cal Ripken Division League.
2. The registration fee for Minor Leagues, Rookie Leagues and T-Ball Leagues is $13.00 per team.
3. The Minor League shall comply with the Cal Ripken Division Rules and Regulations, including the Pitching Limitations, except for the following: Minor League rosters shall consist of no less than 12 players who were not chosen for a Major League team.

   The purpose of a Minor League is not to build a tournament team.

NOTE: A Minor League player can only be advanced to a Major League roster during the season.

CAL RIPKEN BASEBALL – ROOKIE AND T-BALL LEAGUE RULES AND REGULATIONS

1. A Rookie League or T-Ball League can only be started if the local parent program is an accepted and chartered Cal Ripken Division League.
2. The registration fee for Rookie Leagues and T-Ball Leagues is $15.00 per team.
3. The Rookie League and T-Ball League shall comply with those applicable Cal Ripken Division Rules and Regulations except for pitching and the following: Rookie League and T-Ball League rosters shall consist of no less than 12 players who were not chosen for a Major or Minor League team and who have a league age of at least 4 and who have a league age of no more than 9.

NOTE: A Rookie or T-Ball player can advance to a Minor or Major Division if a vacancy occurs.

SUGGESTED CAL RIPKEN BASEBALL – ROOKIE LEAGUE RULES AND REGULATIONS

1. **Age:** 6-9 year olds. Players cannot turn 10 years old during the season.
   The pitching machine concept has been added to demonstrate the positive playing effects which will directly affect players at this younger level. Fear of actually being hit by a pitched ball is eliminated and makes the game safer, more fun, and improves playing confidence and ability of all participants.
2. **Player Roster:** A suggested 12-man roster with all players placed in the batting order. (Game can be played with as few as 8 players.)
   A. A fourth outfielder and fifth infielder will be placed on the field defensively.
   B. A player is placed on either side of the pitching machine assuming the defensive position of the pitcher.
   C. The catcher takes his normal position.

   This now means 11 players have been placed on the field defensively. The extra 12th player is in the batting order and will be placed in the field defensively after the first inning. With each new inning the team coach must rotate the extra player in the field and a new player sits on the bench for the next half inning.

Using this concept, no player is permitted to sit on the bench more than once unless a special situation warrants such action, and is usually an injury. This allows all players to take part in almost the entire game. At this age level it is most important players actively participate every moment and not waste time sitting on the bench and growing bored.

3. **Game Length:** Six innings. Each batter receives a maximum of five pitches. If the ball has not been hit into fair territory, then the batter is out.
   In the event a game is tied, no game should go beyond six innings. We have found it most successful to award two points for each win and one point to each team in a tie game. Should teams have identical point totals, the way of breaking the tie would be based on the results of their head-to-head meeting. In the unlikely event the two teams still remain tied, then the total number of runs scored for the season would be the determining factor and after that a coin toss.

   The length of games averages one hour and forty minutes, with a total of 20 to 25 runs being scored by both teams. Coaches' conferences with the pitchers are eliminated.

4. **Field Dimension:** Standard youth base lengths of 60 feet; the pitching machine is placed at 46 feet. (If the machine is set for a slower speed then the machine will have to be placed closer.)

5. **Umpires:** Only one umpire is necessary since the calling of balls and strikes is eliminated. The pitching machine always throws strikes. The umpire may be used to feed the machine and at the same time act as the base umpire. Much time is saved in this area as time for the warm-up pitches between innings and umpire/coaches discussions are eliminated.

6. **Playing Rules:** Normal youth baseball rules are applied with the exception stealing will not be permitted.
   The basic concept of this type of program is to make the game **safer, more fun** and **interesting** for these young players by using the proper-sized, safer equipment and keeping their interest active in playing baseball. The idea of placing 11 players in the field or having a 12-player batting line-up may be "nontraditional baseball," but at this age level tradition should not be considered. Keeping all the kids safely in the game all of the time should be our primary concern. The Rookie League program equalizes the main problem, the pitching domination of bigger players versus the average or smaller sized players. **Hitting, fielding and running the bases** are the primary objectives of this concept.

   FAILURE to promote and provide a safer and genuine interest for the game opens the door for these very same youngsters to seek out another activity, which may provide more fun for them. Babe Ruth League, Inc. highly encourages the Rookie League concept because it betters the game from the kid's point of view rather than the coaches.

SUGGESTED CAL RIPKEN BASEBALL – T-BALL RULES AND REGULATIONS

1. **BATTING**
   A. All hitters will hit the ball from a batting tee. The tee should be adjusted to such a height the batter will be able to **swing level**.
   B. All rostered players present for the game shall bat in order, whether playing defensively or not.

C. There is no bunting.
D. Pitcher should be in contact with rubber and making pitching motion before batter swings at the ball.
E. An inning is over when nine players have batted or three outs are made, whichever occurs first. The ninth batter of the inning, once reaching first base safely, must continue to circle the bases until he or she is either tagged out or scored, either of which will end the inning.
F. Batting helmets must be used at bat and as base runners.
G. When the ball is hit it must go at least 25 feet, which is shown by an arc drawn from foul line to foul line.
H. Three complete misses of the ball while batting constitutes a strikeout.
I. If a batter hits part of the ball and part of the rubber tee, it is a fair ball if it goes past the 25-foot arc. If a batter hits all rubber or the ball does not go past the 25-foot arc, it is a foul ball.
J. No stealing or leading off permitted.

2. **FIELDING**
   A. Nine players are on the field at any one time, including a catcher.
   B. Each player present must play a minimum of two innings defensively.
   C. A coach may be stationed beyond infielders in order to provide instruction to all defensive players.

3. **GAME**
   A. A regulation game is six innings.
   B. A called game is complete if 3½ or 4 innings are completed.

13-YEAR-OLD PREP LEAGUE RULES AND REGULATIONS

1. A Prep League can only be started if the local program is an accepted and chartered Babe Ruth 13-15 League.
2. Registration fee for such shall be $20.00 per team.
3. The Prep League shall comply with the 13-15 Babe Ruth Rules and Regulations, including the Pitching Limitations, except for the following:
   a. Prep team rosters must be composed of only 13-year-old players and shall consist of no less than twelve (12) players or more than fifteen (15) players.
   b. Thirteen-year-old players listed on the regular 13-15 rosters may also play in the Babe Ruth Prep League at the local league's option.
   c. Players participating on a 13-year-old tournament team are required to play in at least one-half (½) of their team's regularly scheduled games played prior to the start of tournament play.

NOTE: 13-year-old tournament – refer to page 28.

16-YEAR-OLD PREP LEAGUE
RULES AND REGULATIONS

1. A 16-Year-Old Prep League can only be started if the local program is an accepted and franchised Babe Ruth 16-18 League.
2. Registration fee for such shall be $25.00 per team.
3. The Prep League shall comply with the 16-18 Babe Ruth Rules and Regulations except for the following:
   a. Prep team rosters must be composed of only 16-year-old players and shall consist of no less than twelve (12) players or more than eighteen (18) players.
   b. Sixteen-year-old players listed on the regular 16-18 rosters may also play in the Babe Ruth Prep League at the local league's option.

CAL RIPKEN, 13-15, 16-18 DIVISION
(Including Prep Leagues)
LOCAL LEAGUE AND TOURNAMENT PLAY
SPECIAL RULES AND REGULATIONS

THE PLAYING FIELD (CAL RIPKEN 60 FT MAJOR DIVISION) – Refer to the Official Baseball Rule 1.04 with the following exceptions: The infield shall be a 60-foot square. It is recommended the distance from home plate to the nearest outfield fence or other obstruction be a minimum of 200 feet, however, the playing field need not have an enclosing fence surrounding the outfield playing area. The distance between the front side of the pitcher's plate and home base (rear point of home plate) shall be 46 feet. The coaches' boxes shall be 4 feet by 8 feet and shall not be closer than 6 feet from the foul lines. The pitcher's plate shall be six inches above home plate.

THE PLAYING FIELD (CAL RIPKEN 70 FT MAJOR DIVISION) – Refer to the Official Baseball Rule 1.04 with the following exceptions: The infield shall be a 70-foot square. It is recommended the distance from home plate to the nearest outfield fence or other obstruction be a minimum of 225 feet, however, the playing field need not have an enclosing fence surrounding the outfield playing area. The distance between the front side of the pitcher's plate and home base (rear point of home plate) shall be 50 feet. The coaches' boxes shall be 4 feet by 8 feet and shall not be closer than 6 feet from the foul lines. The pitcher's plate shall be eight inches above home plate.

THE PLAYING FIELD (13-15 & 16-18) – Refer to Official Baseball Rule 1.04 with the following exception. A Babe Ruth Baseball playing field need not have an enclosing fence surrounding the outfield playing area.

CATCHER'S BOX (CAL RIPKEN DIVISION) – The catcher's box extends approximately 6 feet, 4¾ inches to the rear of home plate. It is determined by extending each foul line 9 feet beyond the back point of home plate.

BATTER'S BOX (CAL RIPKEN DIVISION) – The batter's box shall be rectangular, 6 feet by 3 feet. The inside line, if used, shall be parallel to the 4 inches away from the side of home plate. It shall extend forward from the center of home plate 3 feet and to the rear 3 feet.

PLAYERS' BENCHES (ALL DIVISIONS) – Refer to Official Baseball Rule 1.08 with the following exceptions: Babe Ruth League, Inc. strongly suggests, but does not require, the players' benches be enclosed or roofed.

OFFICIAL BASEBALL (ALL DIVISIONS) – Refer to Official Baseball Rule 1.09. The local league must use a baseball stamped as an Official Babe Ruth League baseball. The leagues may select from the following baseballs to be used in their local league games: a cushioned cork rubber pill center or a rubber pill center. A softer baseball may be used for Cal Ripken Baseball, Rookie, and T-Ball local league play. The official baseballs include deBeer, Diamond, J.P. Sports, MacGregor, Pro-Nine, Rawlings, Trump, Wilson and Worth.

OFFICIAL TOURNAMENT BASEBALL – Rawlings is the only official Tournament Baseball to be used for all District, State, Regional and World Series competition. The Rawlings tournament baseball has a cushioned cork rubber pill center. The Rawlings baseballs marked BRO or RBRO are to be used for all 13-18 tournament competition. The Rawlings baseballs marked CAL or RCAL are to be used for all Cal Ripken Baseball tournament competition.

BAT REQUIREMENTS:

CAL RIPKEN – The bat may not exceed 33" in length, and the bat barrel may not exceed 2¼" in diameter. Only 2¼" barrel non-wood bats marked BPF 1.15 will be allowed. Wood 2¼" barrel bats are allowed.

13-15 – The bat may not exceed 34" in length, and the bat barrel may not exceed 2⅝" in diameter. All aluminum/alloy barrel bats and all composite handle (only) aluminum/alloy barrels are allowed. Only composite barrel bats certified and marked BBCOR .50 will be allowed. Wood barrel bats conforming to the specifications of Official Baseball Rule 1.10 are allowed.

16-18 – The bat may not exceed 34" in length, and the bat barrel may not exceed 2⅝" in diameter or be greater than a -3 length to weight ratio. Only metal/composite bats certified and marked BBCOR .50 are allowed. Wood barrel bats conforming to the specifications of Official Baseball Rule 1.10 are allowed.

ALL DIVISIONS – If any bat in Cal Ripken Baseball or Babe Ruth Baseball cannot be clearly identified for its make and model to determine the barrel composition, then the bat must be removed from the game. Any cracked or flat bats must be removed from the game.

PENALTY:

- If the illegal bat is discovered prior to a batter completing his "at bat", the bat is simply removed from play and the "at bat" continues.
- A player who uses an illegal bat or non-conforming barrel dimension and hits a fair ball will be ruled out. No advancement on the bases will be allowed, and any outs during the play shall stand. This is an appeal play. The "at bat" will be considered legal once a pitch is thrown to the next batter.
- Any bat discovered prior to the game that does not conform to the above rule shall be directed to be removed immediately and not be allowed for use during the game.

PROTECTIVE HEADGEAR (ALL DIVISIONS) – Shall be worn on deck, at bat, while a base runner, and by players in the coach's box, during practice and all games. Such headgear must cover the top of the head and have extended earflaps, which covers both ears, and properly fit the player wearing it. **PENALTY** – If a player refuses to wear headgear, he shall be removed from the game.

BALL/BAT BOYS/GIRLS (ALL DIVISIONS) – Must wear helmets while out of the dugout in both local league and tournament play.

CATCHER'S MASK, HELMET AND THROAT PROTECTOR (ALL DIVISIONS) – Any player, manager or coach warming up a pitcher at any location shall wear a mask. An extended throat protector is considered part of the catcher's mask. **PENALTY**– If the catcher refuses to wear this equipment, he shall be removed from the game.

(CAL RIPKEN DIVISION) – The catcher's helmet must cover the ears. Hockey style masks are approved.

SHOES (CAL RIPKEN DIVISION) – Shoes with metal cleats or spikes are not permitted to be worn by any player, coach or manager.

JEWELRY – Jewelry is prohibited. Players shall not wear jewelry. Medical alert and religious bracelets or necklaces are not considered jewelry. If worn, they must be taped to the body so as to remain invisible. Wireless communication devices are not allowed.

TRIPS TO THE MOUND (ALL DIVISIONS) – Refer to Official Baseball Rule 8.06 with the following exception: the second trip in the same inning to the same pitcher shall automatically result in the removal of that pitcher from the game as a pitcher only.

A REGULATION GAME (CAL RIPKEN DIVISION) – A regulation game shall consist of 6 innings or 4 innings if the game is called or if the home team has scored more runs in 3½ innings than the visiting team has scored in 4 complete innings. Tournament Rule 11.05, paragraphs 7 and 8 applies for tournament play.

A REGULATION GAME (13-15 & 16-18 DIVISIONS) – Refer to Official Baseball Rule 4.10 with the following exception: a Babe Ruth League Regulation Game shall consist of seven innings. Therefore, where reference in Official Baseball Rules, here or elsewhere, is made to nine innings, substitute the word "seven" for "nine". Tournament Rule 11.05, paragraph 7 and 8 applies for tournament play.

TIE GAME (ALL DIVISIONS) – To interpret Official Baseball Rule 4.10(d), in case of a "tie game" the results are entered into league records as a "tie game" and are so indicated in league standings. After the regular season is concluded, if the tie game affects the league standing of either team involved, the game is **replayed** as a new game. Pitching eligibility for the replay is determined according to the calendar week in which the game is played.

In order for a **CAL RIPKEN DIVISION** game to be declared a tie game by the umpire it must be a regulation game, i.e. 3½ or 4 innings must have been played.

In order for a **13-15** or **16-18 DIVISION** game to be declared a tie game by the umpire it must be a regulation game, i.e. 4½ or 5 innings must have been played.

NOTE: This applies to local league play only. Local leagues have the option to replay tie games as they occur.

NO GAME (ALL DIVISIONS) – If a **CAL RIPKEN BASEBALL** game fails to reach the regulation minimum limit of 3½ or 4 innings played, it is not a regulation game and must be replayed as a new game. If a **13-15** or **16-18 DIVISION** game fails to reach the regulation minimum of 4½ or 5 innings played it is not a regulation game and must be replayed as a new game.

According to Official Baseball Rule 4.10(e) if it is declared "No Game" by the umpire, no records (pitching or otherwise) are kept and pitching eligibility, etc., is intact as it was prior to the beginning of the "No Game" situation. It is as if no pitch was thrown, no ball hit or caught.

NOTE: This applies to local league play only.

FORFEITED GAME – If a game is forfeited before it becomes a regulation game, include no records. Report only the fact of the forfeit. This means the pitching eligibility in the Cal Ripken and 13-15 Divisions would be the same as it was prior to the forfeited game. The pitching eligibility for the next game would be the same as it was prior to the forfeited game.

If a game is forfeited after it has become a regulation game [Cal Ripken Division – after 3½ or 4 innings; 13-15 Division – after 4½ or 5 innings], include the record of all individual and team actions up to the time of forfeit. If the winning team by forfeit is ahead at the time of forfeit, enter as winning and losing pitchers the players who would have qualified if the game had been called at the time of forfeit. If the winning team by forfeit is behind or the score is tied at the time of forfeit, do not enter a winning or losing pitcher. However, innings pitched will apply against each pitcher. Examples of the above interpretation are:

- Team A forfeits to Team B due to a lack of eligible players prior to the start of the game. The pitching eligibility in this case for the next game would be the same as it was prior to the start of the game which was just forfeited.
- Team A and Team B play 5 complete innings when the game is forfeited at the top of the 6th inning when Team A is unable to place 9 players on the field. In this situation, all records, including the innings pitched by each pitcher, would count.

CONTACT RULE (ALL Divisions) – If a runner attempting to reach home plate or a base intentionally and maliciously runs into a defensive player, he will be called out on the play and ejected from the game. The objective of this is to penalize the offensive team for deliberate, unwarranted, unsportsmanlike action by the runner for the obvious purpose of crashing the defensive player. Obviously, this is an umpire's judgement call.

PROTESTING GAMES (ALL DIVISIONS) – No protest shall ever be permitted on judgment decisions by the umpire. Refer to Babe Ruth regular season Rule 0.08 and Babe Ruth Tournament Rule 11.05, paragraph 10.

OFFICIAL BASEBALL RULE 8.01 (ALL DIVISIONS) – The pitcher must take signs from the catcher, while standing on the rubber. **PENALTY** – After a warning by the umpire, the pitcher, on the next offense, shall be removed from the mound as a pitcher for the remainder of the game.

OFFICIAL BASEBALL RULE 8.05 – BALK PENALTY (CAL RIPKEN 60 FT MAJORS ONLY) – The ball is dead, the umpire shall warn the pitcher of the infraction and if the infraction is repeatedly violated, has the authority to remove the pitcher from the game as a pitcher only.

COACHES (CAL RIPKEN DIVISION) – It is strongly recommended adult coaches and managers serve as the base coaches.

SHOULDER EMBLEMS (ALL DIVISIONS) – All teams participating in Babe Ruth Local League and Tournament competition are required to wear the Official Cal Ripken Baseball (4-12 year olds) or Babe Ruth Baseball (13-18 year olds) Shoulder Emblem (shown in Official Babe Ruth Supply Catalog) on their left outer uniform sleeve, or if vest type, sleeveless jersey on the upper left chest of the jersey. The official shoulder emblem is required to be permanently affixed for World Series Competition.

CAP EMBLEM OPTION – Leagues have the option to purchase caps approved dealers of Pacific Headwear and/or Outdoor Cap or Replica Major/Minor caps licensed by Outdoor Cap containing the official Cal Ripken Baseball or Babe Ruth Baseball emblem. These caps from Pacific Headwear and Oudoor Cap with the official Cal Ripken emblem and Babe Ruth emblem will satisfy the Official Shoulder emblem requirement for local league and tournament play not including the Babe Ruth League World Series.

TOBACCO (ALL DIVISIONS) – Babe Ruth League, Inc. prohibits the use of all tobacco products, including smokeless tobacco for both local league and tournament competition. **This rule applies to all field personnel, which includes managers, coaches and umpires.**

MILITARY WAIVER (ALL DIVISIONS) – Complete details on this waiver may be obtained from Babe Ruth League, Inc.

RE-ENTRY RULE (ALL DIVISIONS) – Any of the starting players may withdraw and re-enter once provided such player occupies the same batting position whenever he is in the line-up. A substitute who is withdrawn may not re-enter. All pitchers are governed by the provisions of Official Baseball Rule 3.05 if withdrawn while on the mound pitching. The pitcher withdrawn while a batter or base runner may re-enter the game immediately. If the pitcher is removed from the game because of a second trip in the same inning he may re-enter the game in any position with the exception of pitcher.

RE-ENTRY OF USED PLAYER (ALL DIVISIONS) – Babe Ruth League, Inc. will allow re-entry of already used players if all substitutes have been used and injury occurs, or a player is ejected. Selection of this substitute must be made by the opposing manager. This type of re-entry can only take place when an injury prevents a player from continuing in the game or a player is ejected. The injured or ejected player, once removed from the game, cannot re-enter.

CAL RIPKEN MAJOR/70 DIVISION – The Cal Ripken Major/70 Division will play by the Official Playing Rules including, leading off, stealing, dropped third strike and balk rules. Metal cleats and large barrel bats are not allowed. (See Bat, page 18.)

EXTRA PLAYER (EP) - CAL RIPKEN and BABE RUTH 16-18 DIVISION – A team may elect to add a tenth player to the batting order for district, state and regional tournament competition and world series. Prior to the beginning of the game, this player will be indicated in the line-up as the "EP". The "EP" will be treated as any other starter, and cannot be eliminated during the course of the game. NOTE: If a team's line up starts with 10 players, the team must finish with 10 players. Penalty shall be a forfeit.

OFFICIAL BASEBALL RULES NOT APPLICABLE TO THE CAL RIPKEN MAJOR 60 FT. DIVISION –

Base Running – Rules 5.09(h), 7.04(d) and 7.07
6.09(b) is not used in 10U and Younger

LOCAL LEAGUE OPTIONS

DUAL PARTICIPATION

Any registered Babe Ruth Baseball League may adopt a local league rule, to allow or prohibit any player or team playing in that league from also participating on a team or in a league of any other baseball program, this includes but not limited to pick up games, travel teams and invitational tournaments. This option, however, cannot be adopted by any other Babe Ruth Baseball organization higher than the league level.

PREP LEAGUES

Babe Ruth League, Inc. sanctions, approves and charters 13-Year-Old Prep and 16-Year-Old Prep Leagues provided the local parent organization is an affiliated Babe Ruth program. Complete details on the formulation, chartering and team composition of sanctioned Prep Leagues are available from Babe Ruth League, Inc.

10 RUN RULE

Any Cal Ripken, 13-15 or 16-18 local league game may be terminated immediately once becoming regulation if one team is ahead by 10 or more runs and have had equal times at bat or the home team is leading.

LEAGUE PLAYOFFS

Any Cal Ripken and 13-15 local league, in order to determine a league champion, may use tournament pitching rules if a playoff is necessary.

RE-ENTRY OF USED PLAYER

Babe Ruth League, Inc. will allow re-entry of already used players if all substitutes have been used and injury occurs or a player is ejected. Selection of this substitute must be made by the opposing manager. This type of re-entry can only take place when an injury prevents a player from continuing in the game or a player is ejected. The injured or ejected player, once removed from the game, cannot re-enter.

TIME LIMIT

Any chartered Cal Ripken, 13-15 or 16-18 league prior to the beginning of the regular season may adopt the following time limit rule. No new inning may start after two hours. Games called because of the time limit will be considered regulation games regardless of the number of innings played.

EXTRA PLAYER

Any registered Cal Ripken or Babe Ruth league, prior to the beginning of regular season play, may elect to add a tenth player to the batting order during league games. This player will be indicated in the line-up as the "EP". The "EP" will be treated as any other starter. The re-entry rule including the re-entry of used player is in effect with the "EP".

The EP may appear in any position in the batting order.

15-YEAR-OLD SWING PLAYER OPTION

The 13-15 league president may elect to permit a 15-year-old player to play in a 13-15 and/or a 16-18 league.

For the tournament season, the 13-15 league president will decide on which tournament team the 15-year-old player participates. The player must meet all Babe Ruth League, Inc. eligibility requirements for the respective division in which he participates. A player can only participate on one tournament team in any given year.

NOTE: All swing players must play in 50% of their local league's games to qualify for tournament play, i.e., a 15-year-old swing player who does not participate in 50% of his Babe Ruth 13-15 local league's games is not eligible for a Babe Ruth 13-15 tournament team.

12-YEAR-OLD SWING PLAYER OPTION

The Cal Ripken league president may elect to permit a 12-year-old player to play in a Cal Ripken and/or 13-15 league. For the tournament season, the Cal Ripken league president will decide on which tournament team the 12-year-old player participates. The player must meet all Babe Ruth League, Inc. eligibility requirements for the respective division in which he participates. A player can only participate on one tournament team in any given year.

NOTE: All swing players must play in 50% of their local league's games to qualify for tournament play, i.e., a 12-year-old swing player who does not participate in 50% of his Cal Ripken local league's games is not eligible for a Cal Ripken tournament team.

MUST PLAY RULE

Any chartered Cal Ripken, 13-15, or 16-18 league may adopt a must play rule which clearly defines the participation of the players in local league games.

CONTINUOUS BATTING ORDER

Any chartered Cal Ripken, 13-15, or 16-18 league may allow the use of a continuous batting order which allows every player to bat in a local league game.

11.00 BABE RUTH BASEBALL TOURNAMENT REGULATIONS FOR: CAL RIPKEN, 13-15 DIVISION, 16-18 DIVISIONS

11.01 LEAGUE ELIGIBILITY

1. Each chartered Babe Ruth League shall be eligible for representation in tournament play provided the league has complied with the following requirements on or before the specified dates:
   a. Rule 0.01 – paragraph 2
   b. Rule 0.01 – paragraph 5
   c. Rule 0.01 – paragraph 6
   d. Rule 0.01 – paragraph 7
   e. Rule 0.04 – paragraph 3
   f. Rule 0.04 – paragraph 4
   g. Rule 0.05 – paragraph 1 (a)
   h. State and Regional rules and regulations as established by said State and Regional Commissioners.
2. If a league is divided into two or more divisions, each division shall be represented by a tournament team in tournament competition. Each tournament team shall be selected from a division or a league consisting of not more than ten teams.
3. Authority and responsibility is delegated to State Commissioners to determine tournament eligibility of each individual league based upon Rule 11.01, paragraph 1. Letters of League Eligibility or Non-Eligibility will be forwarded to each registered league and/or division(s) by the State Commissioner. The letter of eligibility can only be issued by the State Commissioner. League eligibility is subject to review by Babe Ruth League, Inc.

11.02 TEAM COMPOSITION

1. Each Cal Ripken and 13-15 Division tournament team shall consist of no less than twelve (12) players and no more than fifteen (15) players, one (1) manager and two (2) coaches. Each 16-18 Division tournament team shall consist of no less than twelve (12) players and no more than eighteen (18) players, one (1) manager and two (2) coaches.
   a. Each Cal Ripken and 13-15 tournament team may consist of any fifteen players from the league or division regardless of age or position played during the regular season. Each 16-18 tournament team may consist of any eighteen (18) players from the league or division regardless of age or position played during the regular season.
   b. Managers and coaches must be selected from registered team rosters from the league or division in which they manage or coach.

NOTE: At no time is it permissible for a player, manager or coach to appear on more than one tournament team roster in the same year. At no time is it permissible for a team to appear in more than one Babe Ruth League Tournament. (Example: A team that has entered the CRL Major/70 tournament trial is not eligible to appear in the Major/60 tournament and vice versa.)

11.03 PLAYER ELIGIBILITY

1. Players listed on team rosters or revisions thereto, which are filed with Headquarters, State Commissioners and District Commissioners in accordance with Rule 0.04, paragraph 3, shall be eligible for the tournament team provided birth documents as defined in Rule 0.04, paragraph 1, are in the custody of the proper tournament authority before the start of competition.
   a. **IN NO CASE** shall a player be allowed to participate in tournament competition unless said birth document is presented to the tournament officials. No tournament official, District, State or Regional Commissioner shall have the authority to waive this requirement.
   b. Due to death, injury, or if a player, manager or coach leaves on his own accord, he may be replaced upon presentation of written approval from Babe Ruth League, Inc. to the Tournament Director. The replacement player, manager or coach is eligible beginning at the next level of tournament competition. The player, manager or coach replaced is not eligible for further tournament competition and replacements must meet all tournament eligibility requirements. Proof of inability of player, manager or coach to continue must be presented in writing by the league president to Babe Ruth League, Inc.

NOTE: Babe Ruth League strongly recommends each league take a full roster of players into tournament competition. Players, manager and coaches may be replaced between tournament levels, but a league may not add players after submitting a team roster at the first level of play.

   c. To be eligible to compete in tournament play, a player, manager or coach must be listed on league and tournament rosters.
   d. To be eligible for tournament play in any division of Babe Ruth League, Inc. a player must have played in at least one-half (1⁄2) of his team's scheduled league games played prior to the start of tournament play.

NOTE: When odd number of games are involved the player receives the benefit – i.e. for eligibility ½ of thirteen games played is six games. If a player is unable to meet the above because of injury or participation in scholastic sports, contact Babe Ruth League, Inc.

2. The last tournament game played shall, at any time upon discovery, be forfeited for the use of an ineligible player.

11.04 DOCUMENTS

1. The tournament team manager must place in the custody of the tournament officials the following documents prior to the start of competition:
   a. Birth document or records as specified by Rule 0.04, paragraph 1, for each of the tournament team players.
   b. Acord Certificate of Coverage of Group Accident Insurance Policy.
   c. Acord Certificate of Coverage of league's Commercial General Liability Insurance Policy.
   d. Tournament team roster certified and signed by League President.
   e. Babe Ruth League, Inc. Letter of Tournament Eligibility Form
   f. Consent For Treatment Form (Starting at state level of play).
   g. A color team photograph with identification must be uploaded with your tournament roster thru Babe Ruth online. Print and place one copy in your teams credentials. Digital photographs may be emailed.

h. Coaching Certification I.D. Card or Certificate. Tournament Managers and Coaches must complete coaching education and certification prior to the start of their first level of tournament competition.

NOTE: These documents must stay in the possession of the Tournament Director during each tournament level. These same documents shall accompany the team as they advance in tournament competition.

11.05 PLAYING RULES

1. All Babe Ruth Tournament Rules and Regulations are in addition to Official Baseball Rules 1.00 through 9.05.
2. Each District, Area, State and Regional Tournament game must be played in the presence of the Tournament Director and Protest Committee. No tournament team shall start play in the absence of said director and committee. All umpires are required to be a Babe Ruth League, Inc. National Umpire Association member to work DIstrict, State, Regional and World Series.
3. District, State and Regional Tournament competition shall be decided by using either a double elimination or a pool play format. The official tournament brackets issued by Babe Ruth League, Inc. for double elimination or pool play formats must be used. World Series competition, will use a pool play format with teams advancing to a single elimination bracket to determine the World Series Champion.

DETERMINATION OF POOL PLAY STANDINGS

When competition begins with pool play format, each division will play a pool play schedule as determined by the commissioner under whose jurisdiction the tournament falls.

At the end of the pool play schedule, a pre-determined number of teams from each division will advance to the single-elimination competition. Participating teams will be advised, in writing, prior to the start of tournament competition how many teams will advance to the single-elimination round. Teams will be seeded at the beginning of a single-elimination competition according to the position they finished in pool play.

Pool play standings will be determined as follows:

1) WIN - LOSS RECORD

The tie breakers are used in order to advance or seed ONE team at a time. Each time a tie is broken to advance one team, leaving a tie between two or more teams, the situation reverts to criterion #2. (Head-to-head results).

If still tied:

2) RESULTS OF HEAD-TO-HEAD COMPETITION

Example: Three teams are tied with identical records for the first place at the end of pool play. Teams A, B and C played against each other once in pool play. Team A won all of its games against Team B and Team C during pool play. Result – Team A advances, which then creates a two-way tie between Team B and Team C. That tie then is broken by reverting to criterion #2.

If still tied:

3) FEWEST RUNS GIVEN UP

If the results of the head-to-head match up(s) of the teams that are involved in the tie cannot break the tie (because no team defeated each of the other teams in the tie each time they played, or because no team has defeated all of the other teams involved in the

tie, or because the teams involved in the tie did not play one another during pool play), then the tie is broken using criterion #3. The remaining teams' tie is broken by reverting to criterion #2.

If still tied:

4) RUN DIFFERENTIAL WITH A MAXIMUM OF 10 PER GAME

In the event a tie is created by virtue of a forfeited game, and the tie cannot be broken by criterion #2 or #3, the order of Criterions #3 and #4 will be reversed and applied to the tie. Since the number of runs which might have been scored during the game may have affected the fewest runs allowed standing (and the awarding of the forfeit gives the "winning team" no additional runs given up), this order will better adjust for that event.

NOTE: The official tiebreakers issued by Babe Ruth League, Inc. for pool play formats must be used.

4. No pitcher in Cal Ripken tournament play shall be allowed to pitch in more than six innings in any two successive tournament games within the same tournament level, (e.g. All players have full pitching eligibility beginning at each level of tournament competition.)

   No pitcher in 13-15 tournament play shall be allowed to pitch in more than seven innings in any two successive tournament games within the same tournament level, (e.g. All players have full pitching eligibility beginning at each level of tournament competition.)

   In 16-18 tournament play, although there are no written restrictions as to the use of pitchers, Babe Ruth League, Inc. strongly cautions extreme care be used so an individual player is not overextended, i.e., protect the player's arm.

NOTE: If a pitcher delivers one pitch in an inning he shall be charged for one inning pitched.

5. Games in which an ineligible pitcher has been used, as specified in paragraph 4, shall be declared forfeited. The withdraw of an ineligible pitcher after the pitcher is announced or after a warm-up pitch is delivered but before that pitcher has pitched a ball to a batter shall not be considered a violation.

6. Trips to the mound – Refer to Official Baseball Rule 8.06 with the following exception: The second trip in the same inning to the same pitcher shall automatically result in the removal of that pitcher from the game **as a pitcher only**.

NOTE: If this pitcher returns as a pitcher, he would be considered an improper pitcher and must be removed as a pitcher immediately when discovered.

7. All Cal Ripken tournament games shall be six (6) completed innings, unless the home team leads at the end of 5½ innings of play. In the event a game is called before completion, it shall be completed from the point of discontinuance.

   All 13-15 and 16-18 tournament games shall be seven (7) completed innings, unless the home team leads at the end of 6½ innings of play. In the event a game is called before completion, it shall be completed from the point of discontinuance.

8. Any Cal Ripken District, State, Area, Regional or World Series tournament game must be terminated immediately once becoming regulation (3½ or 4 innings) if one team is ahead by ten (10) or more runs and has had equal times at bat, or the home team is leading.

Any 13-15 or 16-18 District, State, Regional or World Series tournament game must be terminated immediately once becoming regulation (4½ or 5 innings) if one team is ahead by ten (10) or more runs and has had equal times at bat, or the home team is leading.

9. Babe Ruth League, Inc. will allow re-entry of already used players if all substitutes have been used and an injury occurs or a player is ejected. Selection of this substitute must be made by the opposing manager. This type of re-entry can only take place when an injury prevents a player from continuing in the game or a player is ejected. The injured or ejected player, once removed from the game, cannot re-enter.
10. District, State and Regional Commissioners or their designated representatives shall appoint Protest Committees, composed of at least three members, to be present at all tournament games. A manager must immediately claim a violation of a rule at which time play will be suspended until the Protest Committee has made its decision. The Protest Committee's decision will be final. No protest, except on player eligibility, will be honored after a game has been completed.
11. No byes shall be allowed in Babe Ruth League, Inc. tournaments after the first round of play.
12. No tournament team shall play in more than two tournament games per day without written permission from Babe Ruth League, Inc.

11.06 JURISDICTION

1. All district tournaments shall be under the jurisdiction of the District Commissioner. Tournament Directors may be appointed by the District Commissioner, however, they remain under the jurisdiction of the District Commissioner.
2. All state tournaments shall be under the jurisdiction of the State Commissioner. Tournament Directors may be appointed by the State Commissioner, however, they remain under the jurisdiction of the State Commissioner.
3. All regional tournaments shall be under the jurisdiction of the Regional Commissioner. Tournament Directors may be appointed by the Regional Commissioner, however, they remain under the jurisdiction of the Regional Commissioner.
4. The team winning the District Championship shall compete with the other District Champions within the State to determine the State Champion.

NOTE: Where area competition takes place, Area Champions will compete with other Area Champions to determine the State Champion.

5. The team winning the State Championship shall compete with the other State Champions within the region to determine the Regional Champion.
6. The team winning the Regional Championship shall compete with the other Regional Champions to determine the World Series Champion.
7. A league may have a host team in the State or Regional tournament. A host team will be ineligible automatically for a bye in the state and regional tournaments, and World Series. A Babe Ruth or Cal Ripken league that has two divisions and is hosting a district, state or regional tournament MUST declare which division will be considered the host prior to the start of district tournaments.

   The host teams for all divisions of baseball having received eligibility approval from Babe Ruth League, Inc., and at their League President's discretion, shall be eligible to enter official tournament competition one level below the tournament level they will be hosting.

If a state or regional host team participates in an official tournament trail competition prior to its first game as host team and wins, both it and the second-place team will advance to the next level. If the host team loses in an official tournament trail competition prior to its first game as host team, it will be eligible to participate as the host.

NOTE: A 16-18 host league is given the option of having one or two tournament teams – one as the host and the other to compete through the regular tournament competition bracket. At no time is it permissible for a player, manager or coach to appear on more than one tournament team roster in the same year.

8. Such tournament rules and regulations as may be deemed advisable to meet with local conditions may be established by District Commissioners, State Commissioners, or Regional Commissioners, as long as said rules and regulations are not in conflict with Babe Ruth League, Inc. Rules and Regulations. All district, state and regional officials shall establish their tournament rules in writing and every league, district and state shall be advised, in writing, of the establishment of said rules. These rules must be approved by Babe Ruth League, Inc. Some special rules apply to World Series competition. Participating teams will be provided these rules in writing by Babe Ruth League, Inc.
9. The Host Family Plan will be used in the Babe Ruth 16-18 World Series. When housing of players is required during tournament competition, the Host Family Plan will be under the jurisdiction of the respective commissioner as per Rule 11.06 #1, 2, & 3. The World Series will be under the jurisdiction of Babe Ruth League, Inc. Headquarters. Any team or player refusing to comply with this rule shall be ineligible for tournament competition.

10-AND-UNDER TOURNAMENTS

1. All 10-and-Under tournaments must be staged under the Cal Ripken Division Tournament rules with the exception of Rules 11.02-1.a and 6.09(b) dropped 3rd strike.

NOTE: Any 10-and-Under player listed on a regular Cal Ripken or Minor League roster is eligible for 10U tournament play provided he meets all other eligibility requirements.

2. All players must be 10-and-Under players who were not selected for any other Cal Ripken tournament team. A player, manager or coach may not participate on more than one Cal Ripken tournament team per year.

13-YEAR-OLD TOURNAMENTS

1. All 13-year-old tournaments must be staged under the Babe Ruth 13-15 tournament Rules with the exception of Rule 11.02-1.a.
2. All players must be 13-year-old players who were not selected for a 14-year-old or a 13-15 tournament team. A player, manager, or coach may not participate on more than one Babe Ruth tournament team per year.
3. Any 13-year-old tournament game must be terminated once becoming regulation (4½ or 5 innings) if either team is ahead by 10 or more runs and have had equal times at bat or the home team is leading.

14-YEAR-OLD TOURNAMENTS

1. All 14-year-old tournaments must be staged under the Babe Ruth 13-15 Tournament Rules with the exception of Rule 11.02-1.a.
2. All players must be 13-year-old or 14-year-old players who were not selected for a 13-15 tournament team. A player, manager, or coach may not participate on more than one Babe Ruth tournament team per year.

12.00 BABE RUTH LEAGUE, INC. POWERS OF DISTRICT, STATE AND REGIONAL COMMISSIONERS

1. Leagues chartered/franchised as leagues of Babe Ruth League, Inc., shall thereby be subject to the powers and jurisdiction of the District, State and Regional Commissioners and the district, state and regional organizations within whose territorial limits such leagues exist and operate.
2. State organizations shall constitutionally establish districts encompassing a certain number of leagues which can be directly and satisfactorily administered by a duly elected District Commissioner. Biennial district-wide meetings shall be held to elect District Commissioners. Each League within the district shall be entitled to one voting representative at such meeting to be held prior to October 1 of each odd-numbered year. Minutes indicating proof of election of District Commissioner and financial statements must be received by State Commissioner and Babe Ruth League, Inc. no later than November 1.
3. Biennial state meetings shall be held to elect State Commissioners and establish state organizations. Each District Commissioner shall be entitled to one vote at such meetings to be held prior to October 1 of each odd-numbered year. Minutes indicating proof of election of State Commissioner and financial statement for fiscal year must be received by the Regional Commissioner and Babe Ruth League, Inc. no later than November 1.
4. Regional Commissioner nominations and election procedures shall be followed as set forth in the International Constitution and By-Laws. The International Board of Directors shall elect, biennially, by October 15, eight (8) Regional Commissioners.
5. Babe Ruth League, Inc. must approve and certify all District, State and Regional Commissioners and shall have the power to remove any Commissioner with or without cause. Babe Ruth League Headquarters reserves the right to fill any Commissioner position in the best interest of Babe Ruth League, Inc.
6. Annual state fees may be established at five dollars ($5.00) per team.

NOTE: State fees as well as any other assessment must be approved in writing by Babe Ruth League, Inc.

7. The State Commissioners may formulate, in conjunction with their committees, such rules and regulations and territorial and jurisdictional limits not in conflict with Babe Ruth League, Inc. Rules and Regulations as will enable said Commissioners to better conduct their organizations and govern leagues existing and operating within their territorial limits. Babe Ruth League, Inc. shall pass final approval on all state rules, regulations and policies.
8. State Commissioners or Regional Commissioners shall have the power to suspend any official, manager, coach, player, sponsor, team or league violating District, State, Regional, or Babe Ruth League, Inc. Rules and Regulations. Such suspension will be subject to official review by Babe Ruth League, Inc.
9. District Commissioners shall function as direct representatives of the State Commissioner and Babe Ruth League, Inc. in relation to administration of leagues within their district and shall enforce all rules, regulations and directives as issued by the State Commissioner and Babe Ruth League, Inc.
10. Reports and correspondence concerning District, State and Regional activities such as minutes of meetings, financial statements, etc. must be submitted to Babe Ruth League, Inc. immediately folowing said meetings. In addition, copies of district correspondence must be sent to State and Regional Commissioners. State correspondence must also be sent to the Regional Commissioner as well as Babe Ruth League, Inc.

Babe Ruth League, Inc. – Baseball Regions

NEW ENGLAND — Connecticut • Maine • Eastern Massachusetts • Western Massachusetts New Hampshire • Rhode Island • Vermont • Quebec

MIDDLE ATLANTIC — Delaware • Maryland • Northern New Jersey • Southern New Jersey • Metro New York • Eastern New York • Western New York • Pennsylvania • Ontario • Washington, DC

OHIO VALLEY — Northern Illinois • Southern Illinois • Northern Indiana • Central Indiana • Southern Indiana • Eastern Kentucky • Western Kentucky • Michigan • Ohio • West Virginia • Wisconsin

SOUTHEAST — Northern Florida • Southern Florida • Georgia • Eastern North Carolina • Western North Carolina • South Carolina • Tennessee • Virginia

MIDWEST PLAINS — Colorado • Iowa • Kansas • Minnesota • Missouri • Nebraska • North Dakota • South Dakota • Saskatchawan

SOUTHWEST — Alabama • Northern Arkansas • Southern Arkansas • Louisiana • Mississippi • New Mexico • Oklahoma • Eastern Texas • Southern Texas • Western Texas • Virgin Islands

PACIFIC NORTHWEST — Alaska • Alberta • British Columbia • Idaho • Montana • Northern Oregon • Southern Oregon • Northern Washington • Southern Washington • Wyoming

PACIFIC SOUTHWEST — Arizona • Northern California • Central California • Southern California • Guam • Hawaii • Nevada • Utah

---

Play it Safe!

The safety and well-being of young players is a primary concern of the International Babe Ruth Baseball organization and of local league officials, team managers and coaches. This is the main reason Babe Ruth International Headquarters stresses the following essential components of effective Accident Prevention:

1. Sound conditioning.
2. Immediate attention to injuries, however small.
3. Development of sportsmanship.
4. Proper execution of fundamentals.
5. Selection and care of equipment.
6. Proper field maintenance.
7. Thorough physical examinations.

BABE RUTH LEAGUE, INC.
BOARD OF DIRECTORS

AT-LARGE MEMBERS

STEVEN M. TELLEFSEN
President / CEO
BABE RUTH LEAGUE, INC.
P.O. Box 5000
Trenton, New Jersey 08638
(800) 880-3142

JAMES WAGONER
Chairman of the Board
2920 Jenny Lind
Fort Smith, Arkansas 72901
(479) 782-3041

RAYLA J. ALLISON
9127 Forest Hills Circle
Bloomington, Minnesota 55437
(612) 802-5541

ROBERT DICKSON
252 West Birch Lane
Alexandria, Indiana 46001
(765) 724-4883

RUSSELL E. DIETHRICK, JR.
153 Hallock Street
Jamestown, New York 14701
(716) 487-0609

JIM HILL
315 Terry Pond Cove
White Hall, Arkansas 71602
(870) 267-1590

STEPHEN F. HUPKA
1022 Oak Creek Drive
Nolensville, Tennessee 37135
(615) 283-3672

GEORGE R. LALLY, JR.
85 Spruce Road
Norwood, Massachusetts 02062
(781) 762-1121

NORMAN TRAVIS
P.O. Box 339
Burlington, Colorado 80807
(719) 346-8803

REGIONAL COMMISSIONERS

New England Region
NORMAN R. MESSIER
149 Sherborne Place
Lyndonville, Vermont 05851
(802) 626-8535

Middle Atlantic Region
RAYMOND A. LOTIERZO
100 East Linwood Avenue
Maple Shade, New Jersey 08052
(856) 482-1328

Ohio Valley Region
MARK A. WATKINS
123 N. Main Street
Louisville, Illinois 62858
(618) 665-4885

Southeast Region
HENRY P. SERMONS
218 Bryan Street
Havelock, North Carolina 28532
(252) 447-5660

Midwest Plains Region
TIM KUNTZ
1701 N. 26th St.
Bismarck, North Dakota 58501
(701) 220-2773

Southwest Region
JOE FEATHERSTON
611 NE 2nd Street
Bentonville, Arkansas 72712
(479) 936-0306

Pacific Northwest Region
GORDON W. WELBOURNE
6121 Boundary Drive West
Surrey, British Columbia, Canada V3X 2A5
(604) 597-1659

Pacific Southwest Region
LEONARD J. HAMMER
1012 Ahronian Avenue
Fowler, California 93625
(559) 834-2419

OFFICIAL BASEBALL RULES

DIVISIONS OF THE CODE

1.00 — Objectives of the Game, the Playing Field, Equipment.
2.00 — Definition of Terms.
3.00 — Game Preliminaries.
4.00 — Starting and Ending the Game.
5.00 — Putting the Ball in Play, Dead Ball and Live Ball (in Play).
6.00 — The Batter.
7.00 — The Runner.
8.00 — The Pitcher.
9.00 — The Umpire.

FOREWORD

This code of rules is written to govern the playing of baseball games by professional teams of the American League of Professional Baseball Clubs, the National League of Professional Baseball Clubs, and the leagues that are members of the National Association of Professional Baseball Leagues.

We recognize that many amateur and non-professional organizations play their games under professional rules, and we are happy to make our rules available as widely as possible. It is well to remember that specifications as to fields, equipment, etc., may be modified to meet the needs of each group.

Money fines, long-term suspensions and similar penalties imposed by this code are not practical for amateur groups, but officers and umpires of such organizations should insist on strict observance of all the rules governing the playing of the game.

Baseball not only has maintained its position as the National Game of the United States, but also has become an International Game being played in 100 countries. Its popularity will grow only as long as its players, managers, coaches, umpires and administrative officers respect the discipline of its code of rules.

"Portions of the Official Baseball Rules appearing in this rule book have been reprinted by special permission of the Office of the Commissioner of Baseball. The copyright in the Official Baseball Rules is owned and has been registered by the Commissioner of Baseball. Any additional material contained in this rule book has not been endorsed by the Commissioner of Baseball."

1.00 — Objectives of the Game.

1.01 Baseball is a game between two teams of nine players each, under direction of a manager, played on an enclosed field in accordance with these rules, under jurisdiction of one or more umpires.

1.02 The objective of each team is to win by scoring more runs than the opponent.

1.03 The winner of the game shall be that team which shall have scored, in accordance with these rules, the greater number of runs at the conclusion of a regulation game.

1.04 THE PLAYING FIELD. The field shall be laid out according to the instructions below, supplemented by Diagrams No. 1 through No. 5 located in the back of this book.

The infield shall be a 90-foot square. The outfield shall be the area between two foul lines formed by extending two sides of the square, as in Diagram 1. The distance from home base to the nearest fence, stand or other obstruction shall be 250 feet or more. A distance of 320 feet or more along the foul lines, and 400 feet or more to center field is preferable. The infield shall be graded so that the base lines and home plate are level. The pitcher's plate shall be 10 inches above the level of home plate. The degree of slope from a point 6 inches in front of the pitcher's plate to a point 6 feet toward home plate shall be 1 inch to 1 foot, and such degree of slope shall be uniform. The infield and outfield, including the boundary lines, are fair territory and all other area is foul territory.

It is desirable that the line from home base through the pitchers plate to second base shall run East-Northeast.

It is recommended that the distance from home base to the backstop and from the base lines to the nearest fence, stand or other obstruction on foul territory shall be 60 feet or more. See Diagram 1.

When location of home base is determined, with a steel tape measure 127 feet, 3 3/8 inches in desired direction to establish second base. From home base, measure 90 feet toward first base; from second base, measure 90 feet toward first base; the intersection of these lines establishes first base. From home base, measure 90 feet toward third base; from second base, measure 90 feet toward first base; the intersection of these lines establishes first base. From home base, measure 90 feet toward third base; from second base, measure 90 feet toward third base; the intersection of these lines establishes third base. The distance between first base and third base is 127 feet, 3 3/8 inches. All measurements from home base shall be taken from the point where the first and third base lines intersect.

The catcher's box, the batters' boxes, the coaches' boxes, the three-foot first base lines and the next batter's boxes shall be laid out as shown in Diagrams 1 and 2.

The foul lines and all other playing lines indicated in the diagrams by solid black lines shall be marked with wet unslaked lime, chalk or other white material.

The grass lines and dimensions shown on the diagrams are those used in many fields, but they are not mandatory and each club shall determine the size and shape of the grassed and bare areas of its playing field.

CAL RIPKEN MAJOR/60 DIVISION PLAYING FIELD — The infield shall be a 60-foot square. It is recommended the distance from home plate to the nearest outfield fence or other obstruction be a minimum of 225 feet, however, the playing field need not have an enclosing fence surrounding the outfield playing area. The distance between the front side of the pitcher's plate and home base (rear point of home plate) shall be 46 feet. The coaches' boxes shall be 4 feet by 8 feet and shall be no closer than 6 feet from the foul lines. The pitcher's plate shall be 6 inches above home plate. See Diagrams 4 and 5.

CAL RIPKEN MAJOR/70 DIVISION PLAYING FIELD — The base paths will be 70 feet. The distance between the front side of the pitcher's plate and home base (rear point of home plate) shall be 50 feet. The pitcher's plate shall be 8 inches above home plate.

CAL RIPKEN DIVISION CATCHER'S BOX — The catcher's box extends approximately 6 feet, $4^{3}/_{8}$ inches to the rear of home place. It is determined by extending each foul line 9 feet beyond the back point of home plate.

CAL RIPKEN DIVISION BATTER'S BOX — The batter's box shall be rectangular, 6 feet by 3 feet. The inside line, if used, shall be parallel 4 inches away from the side of home plate. It shall extend forward from the center of home plate 3 feet and to the rear 3 feet.

NOTE: (a) Any Playing Field constructed by a professional club after June 1, 1958, shall provide a minimum distance of 325 feet from home base to the nearest fence, stand or other obstruction on the right and left field foul lines, and a minimum distance of 400 feet to the center field fence.
(b) No existing playing field shall be remodeled after June 1, 1958, in such manner as to reduce the distance from home base to the foul poles and to the center field fence below the minimum specified in paragraph (a) above.

1.05 Home base shall be marked by a five-sided slab of whitened rubber. It shall be 17-inch square with two of the corners removed so that one edge is 17 inches long, two adjacent sides are $8^{1}/_{2}$ inches and the remaining two sides are 12 inches and set at an angle to make a point. It shall be set in the ground with the point at the intersection of the lines extending from home base to first base and to third base; with the 17-inch edge facing the pitcher's plate, and the two 12-inch edges coinciding with the first and third base lines. The top edges of home base shall be beveled and the base shall be fixed in the ground level with the ground surface. (See drawing D in Diagram 2.)

1.06 First, second and third bases shall be marked by white canvas or rubber covered bags, securely attached to the ground as indicated in Diagram 2. The first and third base bags shall be entirely within the infield. The second base bag shall be centered on second base. The bags shall be 15 inches square, not less than three nor more than five inches thick, and filled with soft material.

1.07 The pitcher's plate shall be a rectangular slab of whitened rubber, 24 inches by 6 inches. It shall be set in the ground as shown in Diagrams 1 and 2, so that the distance between the pitcher's plate and home base (the rear point of home plate shall be 60 feet, 6 inches.)

CAL RIPKEN DIVISION PITCHER'S PLATE — The distance between the front side of the pitcher's plate and home base (rear point of home plate) shall be 46 feet. (See Diagram 4).

1.08 The home club shall furnish players' benches, one each for the home and visiting teams. Such benches shall not be less than 25 feet from the base lines. They shall be roofed and shall be enclosed at the back and ends.

BABE RUTH PLAYER BENCHES (All Divisions) — Babe Ruth League, Inc. strongly suggests, but does not require, the players' benches be enclosed or roofed.

1.09 The ball shall be a sphere formed by yarn wound around a small core of cork, rubber or similar material, covered with two strips of white horsehide or cowhide, tightly stitched together. It shall weigh not less than five nor more than 5¼ ounces avoirdupois and measure not less than 9 or more than 9¼ inches in circumference.

BABE RUTH BALL (All Divisions) — A ball stamped "Official Babe Ruth League Baseball" shall be used in all local league play. These official baseballs include deBeer, Diamond, MacGregor, Pro-Nine, Rawlings, Riddell, Trump, Wilson and Worth. Rawlings is the only official Tournament Baseball to be used for all District, State, Regional and World Series competition. (See page 17 for further information on the official tournament baseball.)

1.10 (a) The bat shall be a smooth, round stick not more than 2.61 inches in diameter at the thickest part and not more than 42 inches in length. The bat shall be one piece of solid wood.

NOTE: No laminated or experimental bats shall be used in a professional game (either championship season or exhibition games) until the manufacturer has secured approval from the Rules Committee of his design and methods of manufacture.

(b) Cupped Bats. An indentation in the end of the bat up to one inch in depth is permitted and may be no wider than two inches and no less than one inch in diameter. The indentation must be curved with no foreign substance added.

(c) The bat handle, for not more than 18 inches from its end, may be covered or treated with any material or substance to improve the grip. Any such material or substance, which extends past the 18-inch limitation, shall cause the bat to be removed from the game.

NOTE: If the umpire discovers that the bat does not conform to (c) above until a time during or after which the bat has been used in play, it shall not be ground for declaring the batter out, or ejected from the game.

(d) No colored bat may be used in a professional game unless approved by the Rules Committee.

CAL RIPKEN — The bat may not exceed 33" in length, and the bat barrel may not exceed 2¼" in diameter. Only 2¼" barrel non-wood bats marked BPF 1.15 will be allowed. Wood 2¼" barrel bats are allowed.

13-15 — The bat may not exceed 34" in length, and the bat barrel may not exceed 2⅝" in diameter. All aluminum/alloy barrel bats and all composite handle (only) aluminum/alloy barrels are allowed. Only composite barrel bats certified and marked BBCOR .50 will be allowed. Wood barrel bats conforming to the specifications of Official Baseball Rule 1.10 are allowed.

16-18 — The bat may not exceed 34" in length, and the bat barrel may not exceed $2^{5}/_{8}$" in diameter or be greater than a -3 length to weight ratio. Only metal/composite bats certified and marked BBCOR .50 are allowed. Wood barrel bats conforming to the specifications of Official Baseball Rule 1.10 are allowed.

PENALTY:

- If the illegal bat is discovered prior to a batter completing his "at bat", the bat is simply removed from play and the "at bat" continues.
- A player who uses an illegal bat or non-conforming barrel dimension and hits a fair ball will be ruled out. No advancement on the bases will be allowed, and any outs during the play shall stand. This is an appeal play. The "at bat" will be considered legal once a pitch is thrown to the next batter.
- Any bat discovered prior to the game that does not conform to the above rule shall be directed to be removed immediately and not be allowed for use during the game.

1.11 (a) (1) All players on a team shall wear uniforms identical in color, trim and style, and all players uniforms shall include minimal six-inch numbers on their backs. (2) Any part of an undershirt exposed to view shall be of a uniform solid color for all players on a team. Any player other than the pitcher may have numbers, letters, insignia attached to the sleeve of the undershirt. (3) No player whose uniform does not conform to that of his teammates shall be permitted to participate in a game.

NOTE: All managers and coaches shall be in team uniform during Babe Ruth League, Inc. tournament competition. It is permissible to allow local league uniforms during tournament competition provided they are like in style and have different numbers.

(b) A league may provide that (1) each team shall wear a distinctive uniform at all times, or (2) that each team shall have two sets of uniforms, white for home games and a different color for road games.

(c) (1) Sleeve lengths may vary for individual players, but the sleeves of each individual player shall be approximately the same length. (2) No player shall wear ragged, frayed or slit sleeves.

(d) No player shall attach to his uniform tape or other material of a different color from his uniform.

(e) No part of the uniform shall include a pattern that imitates or suggests the shape of a baseball.

(f) Glass buttons or polished metal shall not be used on a uniform.

NOTE: Jewelry is prohibited in all divisions of Babe Ruth and Cal Ripken Baseball. See page 18 – Jewelry.

(g) No player shall attach anything to the heel or toe of his shoe other than the ordinary shoe plate or toe plate. Shoes with pointed spikes similar to golf or track shoes shall not be worn.

CAL RIPKEN DIVISION CLEATS — Shoes with metal cleats or spikes are not permitted to be worn by any player, coach or manager. Metal cleats are acceptable in the Babe Ruth 13-15 and 16-18 Divisions.

(h) No part of the uniform shall include patches or designs relating to commercial advertisements.

NOTE: All Cal Ripken and Babe Ruth Baseball Divisions – Official Baseball Rule 1.11(h) does not apply. Sponsorship and advertising is allowed on the local league and tournament team uniforms.

(i) A league may provide that the uniforms of its member teams include the names of its players on their backs. Any name other than the last name of the player must be approved by the League President. If adopted, all uniforms for a team must have the names of its players.

1.12 The catcher may wear a leather mitt not more than 38 inches in circumference, nor more than 15 1/2 inches from top to bottom. Such limits shall include all lacing and any leather band or facing attached to the outer edge of the mitt. The space between the thumb section and finger section of the mitt shall not exceed six inches at the top of the mitt and four inches at the base of the thumb crotch. The web shall measure not more than seven inches across the top or more than six inches from its top to the base of the thumb crotch. The web may be either a lacing or lacing through leather tunnels, or a center piece of leather which may be an extension of the palm, connected to the mitt with lacing and constructed so that it will not exceed any of the above mentioned measurements.

1.13 The first baseman may wear a leather glove or mitt not more than twelve inches long from top to bottom and not more than eight inches wide across the palm, measured from the base of the thumb crotch to the outer edge of the mitt. The space between the thumb section and the finger section of the mitt shall not exceed four inches at the top of the mitt and 3 1/2 inches at the base of the thumb crotch. The mitt shall be constructed so that this space is permanently fixed and cannot be enlarged, extended, widened, or deepened by the use of any materials or process whatever. The web of the mitt shall measure not more than five inches from its top to the base of the thumb crotch. The web may be either a lacing, lacing through leather tunnels, or a center piece of leather which may be an extension of the palm connected to the mitt with lacing and constructed so that it will not exceed the above mentioned measurements. The webbing shall not be constructed of wound or wrapped lacing or deepened to make a net type of trap. The glove may be of any weight.

1.14 Each fielder, other than the first baseman or catcher, may use or wear a leather glove. The measurements covering size of glove shall be made by measuring front side or ball receiving side of glove. The tool or measuring tape shall be placed to contact the surface or feature of item being measured and follow all contours in the process. The glove shall not measure more than 12 inches from the tip of any one of the four fingers, through the ball pocket to the bottom edge or heel of glove. The glove shall not measure more than 7 3/4 inches wide, measured from the inside seam at base of first finger, along base of other fingers, to the outside edge of little finger edge of glove. The space or area between the thumb and first finger, called crotch, may be filled with leather webbing or back stop. The webbing may be constructed of two plies of standard leather to close the crotch area entirely, or it may be constructed of a series of tunnels made of leather, or a series of panels of leather, or of lacing leather thongs. The webbing may not be constructed of wound or wrapped lacing to make a net type trap. When webbing is made to cover entire crotch area, the webbing can be constructed so as to be flexible. When constructed of a series of sections, they must be joined together. These sections may not be so constructed to allow depression to be developed by curvatures in the section sides. The webbing shall be made to control the size of the crotch opening. The crotch

opening shall measure not more than 4½ inches at the top, not more than 5¾ inches deep, and shall be 3½ inches wide at it's bottom. The opening of crotch shall not be more than 4½ inches at any point below its top. The webbing shall be secured at each side, and at top and bottom of crotch. The attachment is to be made with leather lacing, these connections to be secured. If they stretch or become loose, they shall be adjusted to their proper condition. The glove can be of any weight.

1.15 (a) The pitcher's glove may not, exclusive of piping, be white, gray, nor, in the judgment of an umpire, distracting in any manner.

(b) No pitcher shall attach to his glove any foreign material of a color different from the glove.

(c) The umpire-in-chief shall cause a glove that violates Rules 1.15(a) or 1.15(b) to be removed from the game, either on his own initiative, at the recommendation of another umpire or upon complaint of the opposing manager that the umpire-in-chief agrees has merit.

1.16 A Professional League shall adopt the following rule pertaining to the use of helmets.

(a) All players shall use some type of protective helmet while at bat.

BABE RUTH PROTECTIVE HEADGEAR (All Divisions) — Protective headgear shall be worn on deck, at bat, while a base runner, and by players in the coach's box, during practice and all games. Such headgear must cover the top of the head and have extended earflaps, which cover both ears, and properly fits the player wearing it. **Penalty** — if a player refuses to wear headgear, he shall be removed from the game.

(b) All players in National Association Leagues shall wear a double ear-flap helmet while at bat.

(c) All players entering the Major Leagues commencing with the 1983 championship season and every succeeding season thereafter must wear a single ear-flap helmet (or at the player's option, a double ear-flap helmet), except those players who were in the Major League during the 1982 season, and who, as recorded in that season, objected to wearing a single ear-flap helmet.

(d) All catchers shall wear a catcher's protective helmet, while fielding their position.

BABE RUTH CATCHER'S MASK AND THROAT PROTECTOR (All Divisions) — Any player, manager or coach warming up a pitcher at home plate shall wear a mask and it is recommended anyone warming up a pitcher at any location wear a mask. An extended throat guard protector is considered part of the catcher's mask. **Penalty** — If a player refuses to comply he shall be removed from the game.

BABE RUTH (All Divisions) PROTECTIVE Cup, a supporter, as well as PROTECTIVE HEADGEAR — which covers the top of the head and properly fits the player wearing it must be worn by the catcher during practice and all games. **Penalty** — If the catcher refuses to wear this equipment he shall be removed from the game.

(e) All bat/ball boys or girls shall wear a protective double ear flap helmets while performing their duties.

BABE RUTH BALL/BAT BOYS/GIRLS (All Divisions) — must wear helmets while out of the dugout in both local league games and tournament play.

If the umpire observes any violation of these rules, he shall direct the violation to be corrected. If the violation is not corrected within a reasonable time, in the umpire's judgement, the umpire shall eject the offender from the game, and disciplinary action, as appropriate, will be recommended.

1.17 Playing equipment including but not limited to the bases, pitcher's plate, baseballs, bats, uniforms, catcher's mitt, first baseman's gloves, infielders and outfielders gloves and protective helmets, as detailed in the provisions of this rule, shall not contain any undue commercialization of the products. Designations by the manufacturer of any such equipment must be in good taste as to the size and content of the manufacturer's logo or the brand name of the item. The provisions of this section 1.17 shall apply to professional leagues only.

NOTE: Manufacturers who plan innovative changes in baseball equipment for professional baseball leagues should submit same to the Official Playing Rules Committee prior to production.

2.00 — Definition of Terms. (All definitions in Rule 2.00 are listed alphabetically.)

ADJUDGED is a judgment decision by the umpire.

An **APPEAL** is the act of a fielder in claiming violation of the rules by the offensive team.

A **BALK** is an illegal act by the pitcher with a runner or runners on base, entitling all runners to advance one base.

A **BALL** is a pitch, which does not enter the strike zone in flight and is not struck at by the batter.

If the pitch touches the ground and bounces through the strike zone it is a "ball." If such a pitch touches the batter, he shall be awarded first base. If the batter swings at such a pitch after two strikes, the ball cannot be caught for the purposes of Rule 6.05(c) and 6.09(b). If the batter hits such a pitch, the ensuing action shall be the same as if he hit the ball in flight.

A **BASE** is one of four points which must be touched by a runner in order to score a run; more usually applied to the canvas bags and the rubber plate which mark the base points.

A **BASE COACH** is a team member in uniform who is stationed in the coach's box at first or third base to direct the batter and the runners.

A **BASE ON BALLS** is an award of first base granted to a batter who, during his time at bat, receives four pitches outside the strike zone.

A **BATTER** is an offensive player who takes his position in the batter's box.

BATTER-RUNNER is a term that identifies the offensive player who has just finished his time at bat until he is put out or until the play on which he became a runner ends.

The **BATTER'S BOX** is the area within which the batter shall stand during his time at bat.

The **BATTERY** is the pitcher and catcher.

BENCH OR DUGOUTS is the seating facilities reserved for players, substitutes and other team members in uniform when they are not actively engaged on the playing field.

A **BUNT** is a batted ball not swung at, but intentionally met with the bat and tapped slowly within the infield.

A **CALLED GAME** is one in which, for any reason, the umpire-in-chief terminates play.

A **CATCH** is the act of a fielder in getting secure possession in his hand or glove of a ball in flight and firmly holding it; providing he does not use his cap, protector, pocket or any other part of his uniform in getting possession. It is not a catch, however, if simultaneously or immediately following his contact with the ball, he collides with a player, or with a wall, or if he falls down, and as a result of such collision or falling, drops the ball. It is not a catch if a fielder

touches a fly ball, which then hits a member of the offensive team or an umpire and then is caught by another defensive player. If the fielder has made the catch and drops the ball while in the act of making a throw following the catch, the ball shall be adjudged to have been caught. In establishing the validity of the catch, the fielder shall hold the ball long enough to prove that he has complete control of the ball and that his release of the ball is voluntary and intentional.

A catch is legal if the ball is finally held by any fielder, even though juggled, or held by another fielder before it touches the ground. Runners may leave their bases the instant the first fielder touches the ball. A fielder may reach over a fence, railing, rope or other line of demarcation to make a catch. He may jump on top of a railing, or canvas that may be in foul ground. No interference should be allowed when a fielder reaches over a fence, railing, rope or into a stand to catch a ball. He does so at his own risk.

If a fielder, attempting a catch at the edge of the dugout, is "held up" and kept from an apparent fall by a player or players of either team and the catch is made it shall be allowed.

The **CATCHER** is the fielder who takes his position back of the home base.

The **CATCHER'S BOX** is that area within which the catcher shall stand until the pitcher delivers the ball.

The **CLUB** is a person or group of persons responsible for assembling the team personnel, providing the playing field and required facilities, and representing the team in relations with the league.

A **COACH** is a team member in uniform appointed by the manager to perform such duties as the manager may designate, such as but not limited to acting as base coach.

A **DEAD BALL** is a ball out of play because of a legally created temporary suspension of play.

The **DEFENSE** (or **DEFENSIVE**) is the team, or any player of the team, in the field.

A **DOUBLE-HEADER** is two regularly scheduled or rescheduled games, played in immediate succession.

A **DOUBLE PLAY** is a play by the defense in which two offensive players are put out as a result of continuous action, providing there is no error between putouts.

a) A force double play is one in which both putouts are force plays.
b) A reverse force double play is one in which the first out is a force play and the second out is made on a runner for whom the force is removed by reason of the first out. Examples of reverse force plays: runner on first, one out; batter grounds to first baseman, who steps on first base (one out) and throws to second baseman or shortstop for the second out (a tag play). Another example: bases loaded, none out; batter grounds to third baseman, who steps on third base (one out); then throws to catcher for the second out (tag play).

DUGOUT (See definition of BENCH).

A **FAIR BALL** is a batted ball that settles on fair ground between home and first base, or between home and third base, or that is on or over fair territory when bounding to the outfield past first or third base, or that touches first, second or third base, or that first falls on fair territory on or beyond first base or third base, or that, while on or over fair territory touches the person of an umpire or player, or that, while over fair territory, passes out of the playing field in flight.

A fair fly shall be judged according to the relative position of the ball and the foul line, including the foul pole, and not as to whether the fielder is on fair or foul territory at the time he touches the ball.

If a fly ball lands in the infield between home and first base, or home and third base, and then bounces to foul territory without touching a player or umpire and before passing first or third base, it is a foul ball; or if the ball settles on foul territory or is touched by a player on foul territory, it is a foul ball. If a fly ball lands on or beyond first or third base and then bounces to foul territory, it is a fair hit.

Clubs, increasingly, are erecting tall foul poles at the fence line with a wire netting extending along the side of the pole on fair territory above the fence to enable the umpires more accurately to judge fair and foul balls.

FAIR TERRITORY is that part of the playing field within, and including the first base and third base lines, from home base to the bottom of the playing field fence and perpendicularly upwards. All foul lines are in fair territory.

A **FIELDER** is any defensive player.

FIELDER'S CHOICE is the act of a fielder who handles a fair grounder and, instead of throwing to first base to put out the batter-runner, throws to another base in an attempt to put out a preceding runner. The term is also used by scorers (a) to account for the advance of the batter-runner who takes one or more extra bases when the fielder who handles his safe hit attempts to put out a preceding runner; (b) to account for the advance of a runner (other than by stolen base or error) while a fielder is attempting to put out another runner; and (c) to account for the advance of a runner made solely because of the defensive team's indifference (undefended steal).

A **FLY BALL** is a batted ball that goes high in the air in flight.

A **FORCE PLAY** is a play in which a runner legally loses his right to occupy a base by reason of the batter becoming a runner.

Confusion regarding this play is removed by remembering that frequently the "force" situation is removed during the play. Example: Man on first, one out, ball hit sharply to first baseman who touches the bag and batter-runner is out. The force is removed at that moment and runner advancing to second must be tagged. If there had been a runner on third or second, and either of these runners scored before the tag-out at second, the run counts. Had the first baseman thrown to second and the ball then had been returned to first, the play at second was a force out, making two outs and the return throw to first ahead of the runner would have made three outs. In that case, no run would score.

Example: Not a force out. One out. Runner on first and third. Batter flies out. Two out, runner on third tags up and scores. Runner on first tries to retouch before throw from fielder reaches first baseman, but does not get back in time and is out. Three outs. If in the umpire's judgment, the runner from third touched home before the ball was held at first base, the run counts.

A **FORFEITED GAME** is a game declared ended by the umpire-in-chief in favor of the offended team by the score of 9 to 0, for violation of the rules.

The score in Cal Ripken games would be 6 to 0.
The score in 13-15 games would be 7 to 0.
The score in 16-18 games would be 7 to 0.
See page 19 for details concerning forfeited games.

A **FOUL BALL** is a batted ball that settles on foul territory between home and first base, or between home and third base, or that bounds past first or third base on or over foul territory, or that first falls on foul territory beyond first and third base, or that, while on or over foul territory, touches the person of an umpire or player, or any object foreign to the natural ground.

A foul fly shall be judged according to the relative position of the ball and the foul line, including the foul pole, and not as to whether the infielder is on foul or fair territory at the time he touches the ball.

A batted ball not touched by a fielder, which hits the pitcher's rubber and rebounds into foul territory, between home and first, or between home and third base is a foul ball.

FOUL TERRITORY is that part of the playing field outside the first and third base lines extended to the fence and perpendicularly upwards.

A **FOUL TIP** is a batted ball that goes sharp and direct from the bat to the catcher's hands and is legally caught. It is not a foul tip unless caught and any foul tip that is caught is a strike, and the ball is in play. It is not a catch if it is a rebound, unless the ball has first touched the catcher's glove or hand.

A **GROUND BALL** is a batted ball that rolls or bounces close to the ground.

The **HOME TEAM** is the team on whose grounds the game is played, or if the game is played on neutral grounds, the home team shall be designated by mutual agreement. This does not apply to Babe Rule League, Inc. tournament play.

ILLEGAL (or **ILLEGALLY**) is contrary to these rules.

An **ILLEGAL PITCH** is (1) a pitch delivered to the batter when the pitcher does not have his pivot foot in contact with the pitcher's plate; (2) a quick return pitch. An illegal pitch when runners are on base is a balk.

An **INFIELDER** is a fielder who occupies a position in the infield.

An **INFIELD FLY** is a fair fly ball (not including a line drive nor an attempted bunt) which can be caught by an infielder with ordinary effort, when first and second, or first, second and third bases are occupied, before two are out. The pitcher, catcher and any outfielder who stations himself in the infield on the play shall be considered infielders for the purpose of this rule.

When it seems apparent that a batted ball will be an Infield Fly, the umpire shall immediately declare "Infield Fly" for the benefit of the runners. If the ball is near the baselines, the umpire shall declare "Infield Fly, if Fair."

The ball is alive and runners may advance at the risk of the ball being caught, or retouch and advance after the ball is touched, the same as on any fly ball. If the hit becomes a foul ball, it is treated the same as any foul.

If a declared Infield Fly is allowed to fall untouched to the ground, and bounces foul before passing first or third base, it is a foul ball. If a declared Infield Fly falls untouched to the ground outside the baseline, and bounces fair before passing first or third base, it is an Infield Fly.

Rule 2.00 (Infield Fly) Comments: On the infield fly rule, the umpire is to rule whether the ball could ordinarily have been handled by an infielder – not by some arbitrary limitation such as the grass, or the base lines. The umpire must rule also that a ball is an infield fly, even if handled by an outfielder, if, in the umpire's judgment, the ball could have been as easily handled by an infielder. The infield fly is in no sense to be considered an appeal play. The umpire's judgment must govern, and the decision should be made immediately.

When an infield fly rule is called, runners may advance at their own risk. If on an infield fly rule, the infielder intentionally drops a fair ball, the ball remains in play despite the provisions of Rule 6.05(1). The infield fly rule takes precedence.

If interference is called during an infield fly, the ball remains alive until it is determined whether the ball is fair or foul. If fair, both the runner who interfered with the fielder and the batter are out. If foul, even if caught, the runner is out and the batter returns to bat.

IN FLIGHT describes a batted, thrown, or pitched ball which has not yet touched the ground or some object other than a fielder.

IN JEOPARDY is a term indicating that the ball is in play and an offensive player may be put out.
An **INNING** is that portion of a game within which the teams alternate on offense and defense and in which there are three putouts for each team. Each team's time at bat is a half-inning.

INTERFERENCE

(a) Offensive interference is an act by the team at bat which interferes with, obstructs, impedes, hinders or confuses any fielder attempting to make a play. If the umpire declares the batter, batter-runner, or a runner out for interference, all other runners shall return to the last base that was in the judgment of the umpire, legally touched at the time of the interference, unless otherwise provided by these rules.

Rule 2.00 (Interference (a)) Comment: In the event the batter-runner has not reached first base, all runners shall return to the base last occupied at the time of the pitch; provided, however, if during an intervening play at the plate with less than two outs a runner scores, and then the batter-runner is called out for interference outside the three-foot lane, the runner is safe and the run shall count.

(b) Defensive interference is an act by a fielder which hinders or prevents a batter from hitting a pitch.

(c) Umpire's interference occurs (1) When a plate umpire hinders, impedes or prevents a catcher's throw attempting to prevent a stolen base, or (2) When a fair ball touches an umpire on fair territory before passing a fielder.

(d) Spectator interference occurs when a spectator reaches out of the stands and over the playing field, or goes on the playing field, and touches a live ball.

The **LEAGUE** is a group of clubs whose teams play each other in a pre-arranged schedule under these rules for the league championship.

The **LEAGUE PRESIDENT** shall enforce the official rules, resolve any disputes involving the rules, and determine any protested games.The league president may fine or suspend any player, coach, manager or umpire for violation of these rules, at his discretion.

LEGAL (or **LEGALLY**) is in accordance with these rules.

A **LIVE BALL** is a ball which is in play.

A **LINE DRIVE** is a batted ball that goes sharp and direct from the bat to a fielder without touching the ground.

The **MANAGER** is a person appointed by the club to be responsible for the team's actions on the field, and to represent the team in communications with the umpire and the opposing team. A player may be appointed manager.

(a) The club shall designate the manager to the league president or the umpire-in-chief not less than thirty minutes before the scheduled starting time of the game.

(b) The manager may advise the umpire that he has delegated specific duties prescribed by the rules to a player or coach, and any action of such designated representative shall be official. The manager shall always be responsible for his team's conduct, observance of the official rules, and deference to the umpire.

(c) If a manager leaves the field, he shall designate a player or coach as his substitute, and such substitute manager shall have the duties, rights and responsibilities of the manager. If the manager fails or refuses to designate his substitute before leaving, the umpire-in-chief shall designate a team member as substitute manager.

OBSTRUCTION is the act of a fielder who, while not in possession of the ball and not in the act of fielding the ball, impedes the progress of any runner.

If a fielder is about to receive a thrown ball and if the ball is in flight directly toward and near enough to the fielder so he must occupy his position to receive the ball he may be considered "in the act of fielding a ball." It is entirely up to the judgment of the umpire as to whether a fielder is in the act of fielding a ball. After a fielder has made an attempt to field a ball and missed, he can no longer be in the "act of fielding" the ball. For example: If an infielder dives at a ground ball and the ball passes him and he continues to lie on the ground and delays the progress of the runner, he very likely has obstructed the runner.

OFFENSE is the team, or any player of the team, at bat.

An **OUT** is one of the three required retirements of an offensive team during its time at bat.

An **OUTFIELDER** is a fielder who occupies a position in the outfield, which is the area of the playing field most distant from home base.

OVERSLIDE (or **OVERSLIDING**) is the act of an offensive player when his slide to a base, other than when advancing from home to first base, is with such momentum that he loses contact with the base.

A **PENALTY** is the application of these rules following an illegal act.

The **PERSON** of a player or an umpire is any part of his body, his clothing or his equipment.

A **Pitch** is a ball delivered to the batter by the pitcher.

All other deliveries of the ball by one player to another are thrown balls.

A **PITCHER** is the fielder designated to deliver the pitch to the batter.

The pitcher's **PIVOT FOOT** is that foot which is in contact with the pitcher's plate as he delivers the pitch.

"PLAY" is the umpire's order to start the game or to resume action following any dead ball.

A **QUICK RETURN** pitch is one made with obvious intent to catch a batter off balance. It is an illegal pitch.

REGULATION GAME. See Rules 4.10 and 4.11.

A **RETOUCH** is the act of a runner in returning to a base as legally required.

A **RUN** (or **SCORE**) is the score made by an offensive player who advances from batter to runner and touches first, second, third and home bases in that order.

A **RUN-DOWN** is the act of the defense in an attempt to put out a runner between bases.

A **RUNNER** is an offensive player who is advancing toward or touching or returning to any base.

"SAFE" is a declaration by the umpire that a runner is entitled to the base for which he was trying.

SET POSITION is one of the two legal pitching positions.

SQUEEZE PLAY is a term to designate a play when a team, with a runner on third base, attempts to score that runner by means of a bunt.

A **STRIKE** is a legal pitch when so called by the umpire, which —

(a) Is struck at by the batter and is missed;
(b) Is not struck at, if any part of the ball passes through any part of the strike zone;
(c) Is fouled by the batter when he has less than two strikes;
(d) Is bunted foul;
(e) Touches the batter as he strikes at it;
(f) Touches the batter in flight in the strike zone; or
(g) Becomes a foul tip.

The **STRIKE ZONE** is that area over home plate the upper limit of which is a horizontal line at the midpoint between the top of the shoulders and the top of the uniform pants, and the lower level is a line at the hollow beneath the kneecap. The Strike Zone shall be determined from the batter's stance as the batter is prepared to swing at a pitched ball.

A **SUSPENDED GAME** is a called game, which is to be completed at a later date.

A **TAG** is the action of a fielder in touching a base with his body while holding the ball securely and firmly in his hand or glove; or touching a runner with the ball, or with his hand or glove holding the ball, while holding the ball securely and firmly in his hand or glove.

A **THROW** is the act of propelling the ball with the hand and arm to a given objective and is to be distinguished, always, from the pitch.

A **TIE GAME** is a regulation game, which is called when each team has the same number of runs.

"TIME" is the announcement by an umpire of a legal interruption of play, during which the ball is dead.

TOUCH. To touch a player or umpire is to touch any part of his body, his clothing or his equipment.

A **TRIPLE PLAY** is a play by the defense in which three offensive players are put out as a result of continuous action, providing there is no error between put outs.

A **WILD PITCH** is one so high, so low, or so wide of the plate that it cannot be handled with ordinary effort by the catcher.

WIND-UP POSITION is one of the two legal pitching positions.

NOTE: Any reference in these Official Baseball Rules to "he," "him" or "his" shall be deemed to be a reference to "she," "her" or "hers," as the case may be, when the person is female.

3.00 — Game Preliminaries.

3.01 Before the game begins the umpire shall —

(a) Require strict observance of all rules governing implements of play and equipment of players;

(b) Be sure that all playing lines (heavy lines on Diagrams 1 and 2) are marked with lime, chalk or other white material easily distinguishable from the ground or grass;

(c) Receive from the home club a supply of regulation baseballs, the number and make to be certified to the home club by the league president. The umpire shall inspect the baseballs and ensure they are regulation baseballs and that they are properly rubbed so that the gloss is removed. The umpire shall be the sole judge of the fitness of the balls to be used in the game;

All Divisions — A ball stamped Official Babe Ruth League Baseball shall be used in all local league and tournament play as specified on page 18. See Baseball and Tournament Baseball.

(d) Be assured by the home club that at least one dozen regulation reserve balls are immediately available for use if required.

(e) Have in his possession at least two alternate balls and shall require replenishment of such supply of alternate balls as needed throughout the game. Such alternate balls shall be put in play when —

(1) A ball has been batted out of the playing field or into the spectator area;

(2) A ball has become discolored or unfit for further use;

(3) The pitcher requests such alternate ball.

The umpire shall not give an alternate ball to the pitcher until play has ended and the previously used ball is dead. After a thrown or batted ball goes out of the playing field, play shall not be resumed with an alternate ball until the runners have reached the bases to which they are entitled. After a home run is hit out of the playing grounds, the umpire shall not deliver a new ball to the pitcher or the catcher until the batter hitting the home run has crossed the plate.

3.02 No player shall intentionally discolor or damage the ball by rubbing it with soil, rosin, paraffin, licorice, sand-paper, emery-paper or other foreign substance.

Penalty: The umpire shall demand the ball and remove the offender from the game. In addition, the offender shall be suspended automatically for 10 games. For rules in regard to a pitcher defacing the ball, see Rules 8.02(a)(2) through (6).

3.03 A player, or players, may be substituted during a game at any time the ball is dead. A substitute player shall bat in the replaced player's position in the team's batting order. A player once removed from a game shall not re-enter that game. If a substitute enters the game in place of a player-manager, the manager may thereafter go to the coaching lines at his discretion. When two or more substitute players of the defensive team enter the game at the same time, the manager shall, immediately before they take their positions as fielders, designate to the umpire-in-chief such players' positions in the team's batting order and the umpire-in-chief shall so notify the official scorer. If this information is not immediately given to the umpire-in-chief, he shall have authority to designate the substitutes' places in the batting order.

BABE RUTH RE-ENTRY (All Divisions) — See pages 12-13 for Babe Ruth Re-Entry Rule and Explanation.

A pitcher may change to another position only once during the same inning; e.g. the pitcher will not be allowed to assume a position other than a pitcher more than once in the same inning.

Any player other than a pitcher substituted for an injured player shall be allowed five warm-up throws. (See Rule 8.03 for pitchers.)

3.04 A player whose name is on his team's batting order may not become a substitute runner for another member of his team.

This rule is intended to eliminate the practice of using so-called courtesy runners. No player in the game shall be permitted to act as a courtesy runner for a teammate. No player who has been in the game and has been taken out for a substitute shall return as a courtesy runner. Any player not in the line-up, if used as a runner, shall be considered as a substitute player.

3.05 (a) The pitcher named in the batting order handed the umpire-in-chief, as provided in Rules 4.01 (a) and 4.01 (b), shall pitch to the first batter or any substitute batter until such batter is put out or reaches first base, unless the pitcher sustains injury or illness which, in the judgment of the umpire-in-chief, incapacitates him from pitching.

(b) If the pitcher is replaced, the substitute pitcher shall pitch to the batter then at bat, or any substitute batter until such batter is put out or reaches first base, or until the offensive team is put out, unless the substitute pitcher sustains injury or illness which, in the umpire-in-chief's judgement, incapacitates him for further play as a pitcher.

(c) If an improper substitution is made for the pitcher, the umpire shall direct the proper pitcher to return to the game until the provisions of this rule are fulfilled. If the improper pitcher is permitted to pitch, any play that results is legal. The improper pitcher becomes the proper pitcher as soon as he makes his first pitch to the batter, or as soon as any runner is put out.

If a manager attempts to remove a pitcher in violation of Rule 3.05 (c) the umpire shall notify the manager of the offending club that it cannot be done. If, by chance, the umpire-in-chief has, through oversight, announced the incoming improper pitcher, he should still correct the situation before the improper pitcher pitches. Once the improper pitcher delivers a pitch he becomes the proper pitcher.

(d) If a pitcher who is already in the game crosses the foul line on his way to take his place on the pitcher's plate to start an inning, he shall pitch to the first batter until such batter is put out or reaches first base, unless the batter is substituted for, or the pitcher sustains an injury or illness which, in the judgment of the umpire-in-chief, incapacitates him from pitching. If the pitcher ends the previous inning on base or at bat and does not return to the dugout after the inning is completed, the pitcher is not required to pitch to the first batter of the inning until he makes contact with the pitcher's plate to begin his warm-up pitches.

3.06 The manager shall immediately notify the umpire-in-chief of any substitution and shall state to the umpire-in-chief the substitute's place in the batting order.

Players for whom substitutions have been made may remain with their team on the bench or may "warm-up" pitchers. If a manager substitutes another player for himself, he may continue to direct his team from the bench or the coach's box. Umpires should not permit players for whom substitutes have been made, and who are permitted to remain on the bench, to address any remarks to any opposing player or manager, or to the umpires.

3.07 The umpire-in-chief, after having been notified shall immediately announce, or cause to be announced, each substitution.

3.08 (a) If no announcement of a substitution is made, the substitute shall be considered as having entered the game when —
(1) If a pitcher, he takes his place on the pitcher's plate;
(2) If a batter, he takes his place in the batter's box;
(3) If a fielder, he reaches the position usually occupied by the fielder he has replaced, and play commences;
(4) If a runner, he takes the place of the runner he has replaced.

(b) Any play made by, or on, any of the above mentioned unannounced substitutes shall be legal.

3.09 Players in uniform shall not address or mingle with spectators, nor sit in the stands before, during, or after a game. No manager, coach or player shall address any spectator before or during a game. Players of opposing teams shall not fraternize at any time while in uniform.

3.10 (a) The manager of the home team shall be the sole judge as to whether a game shall be started because of unsuitable weather conditions or the unfit condition of the playing field, except for the second game of a doubleheader. **EXCEPTION:** Any league may permanently authorize its president to suspend the application of this rule as to that league during the closing weeks of its championship season in order to assure that the championship is decided each year on its merits. When the postponement of, and possible failure to play, a game in the final series of a championship season between any two teams might affect the final standing of any club in the league, the president, on appeal from any league club, may assume the authority granted the home team manager by this rule.

(b) The umpire-in-chief of the first game shall be the sole judge as to whether the second game of a doubleheader shall not be started because of unsuitable weather conditions or the unfit condition of the playing field.

(c) The umpire-in-chief shall be the sole judge as to whether and when play shall be suspended during a game because of unsuitable weather conditions or the unfit condition of the playing field; as to whether and when the play shall be resumed after such suspension; and as to whether and when a game shall be terminated after such suspension. He shall not call the game until at least thirty minutes after he has suspended play. He may continue the suspension as long as he believes there is any chance to resume play.

The umpire-in-chief shall at all times try to complete a game. His authority to resume play following one or more suspensions of as much as 30 minutes each shall be absolute and he shall terminate a game only when there appears to be no possibility of completing it.

3.11 Between games of a doubleheader, or whenever a game is suspended because of the unfitness of the playing field, the umpire-in-chief shall have control of ground-keepers and assistants for the purpose of making the playing field fit for play.

Penalty: For violation, the umpire-in-chief may forfeit the game to the visiting team.

3.12 When the umpire suspends play he shall call "Time." At the umpire's call of "Play," the suspension is lifted and play resumes. Between the call of "Time" and the call of "Play" the ball is dead.

3.13 The manager of the home team shall present to the umpire-in-chief and the opposing manager any ground rules he thinks necessary covering the overflow of spectators upon the playing field, batted or thrown balls into such overflow, or any other contingencies. If these rules are acceptable to the opposing manager they shall be legal. If these rules are unacceptable to the opposing manager, the umpire-in-chief shall make and enforce any special ground rules he thinks are made necessary by ground conditions which shall not conflict with the official playing rules.

3.14 Members of the offensive team shall carry all gloves and other equipment off the field and to the dugout while their team is at bat. No equipment shall be left lying on the field, either in fair or foul territory.

3.15 No person shall be allowed on the playing field during a game except players and coaches in uniform, managers, news photographers authorized by the home team, umpires, officers of the law in uniform and watchmen or other employees of the home club. In case of unintentional interference with play by any person herein authorized to be on the playing field (except members of the offensive team participating in the game, or a coach in the coach's box, or an umpire) the ball is alive and in play. If the interference is intentional, the ball shall be dead at the moment of the interference and the umpire shall impose such penalties as in his opinion will nullify the act of interference.

NOTE: See Rule 7.11 for individuals excepted above, also see Rule 7.08(b).

The question of intentional or unintentional interference shall be decided on the basis of the person's action. For example: a bat boy, ball attendant, policeman, etc., who tries to avoid being touched by a thrown or batted ball but still is touched by the ball would be involved in unintentional interference. If, however, he kicks the ball or picks it up or pushes it, that is considered intentional interference, regardless of what his thought may have been. PLAY: Batter hits ball to shortstop, who fields ball but throws wild past first baseman. The offensive coach at first base, to avoid being hit by the ball, falls to the ground and the first baseman on his way to retrieve the wild thrown ball runs into the coach; the batter-runner finally ends up on third base. The question is asked whether the umpire should call interference on the part of the coach. This would be up to the judgment of the umpire and if the umpire felt that the coach did all he could to avoid interfering with the play, no interference need be called. If it appeared to the umpire that the coach was obviously just making it appear he was trying not to interfere, the umpire should rule interference.

3.16 When there is spectator interference with any thrown or batted ball, the ball shall be dead at the moment of interference and the umpire shall impose such penalties as in his opinion will nullify the act of interference.

APPROVED RULING: If spectator interference clearly prevents a fielder from catching a fly ball, the umpire shall declare the batter out.

There is a difference between a ball which has been thrown or batted into the stands, touching a spectator thereby being out of play even though it rebounds onto the field and a spectator going onto the field or reaching over, under or through a barrier and touching a ball in play or touching or otherwise interfering with a player. In the latter case it is clearly intentional and shall be dealt with as intentional interference as in Rule 3.15. Batter and runners shall be placed where in the umpire's judgment they would have been had the interference not occurred.

No interference shall be allowed when a fielder reaches over a fence, railing, rope or into a stand to catch a ball. He does so at his own risk. However should a spectator reach out on the playing field side of such fence, railing or rope and plainly prevents the fielder from catching the ball, then the batsman should be called out for the spectator's interference. Example: Runner on third base, one out and a batter hits a fly ball deep to the outfield (fair or foul). Spectator clearly interferes with the outfielder attempting to catch the fly ball. Umpire calls the batter out for spectator interference. Ball is dead at the time of the call. Umpire decides that because of the distance the ball was hit, the runner on third base would have scored after the catch if the fielder had caught the ball which was interfered with, therefore, the runner is permitted to score. This might not be the case if such fly ball was interfered with a short distance from home plate.

3.17 Players and substitutes of both teams shall confine themselves to their team's benches unless actually participating in the play or preparing to enter the game, or coaching at first or third base. No one except players, substitutes, managers, coaches, trainers and bat boys shall occupy a bench during a game.

Penalty: For violation the umpire may, after warning, remove the offender from the field.

Players on the disabled list are permitted to participate in pre-game activity and sit on the bench during the game but may not take part in any activity during the game such as warming up a pitcher, bench-jockeying, etc. Disabled players are not allowed to enter the playing surface at any time or for any purpose during the game.

BABE RUTH (All Divisions) — Only players, substitutes, a manager, two coaches and a bat boy/girl shall occupy the bench during the game.

3.18 The home team shall provide police protection sufficient to preserve order. If a person, or persons, enter the playing field during a game and interferes in any way with the play, the visiting team may refuse to play until the field is cleared.

Penalty: If the field is not cleared in a reasonable length of time, which shall in no case be less than fifteen minutes after the visiting team's refusal to play, the umpire may forfeit the game to the visiting team.

4.00 — Starting and Ending a Game.

4.01 Unless the home club shall have given previous notice that the game has been postponed or will be delayed in starting, the umpire, or umpires, shall enter the playing field five minutes before the hour set for the game to begin and proceed directly to home base where they shall be met by the managers of the opposing teams.

In sequence —

(a) First, the home manager shall give his batting order to the umpire-in-chief, in duplicate.

(b) Next, the visiting manager shall give his batting order to the umpire-in-chief, in duplicate.

(c) The umpire-in-chief shall make certain that the original and copies of the respective batting orders are identical, and then tender a copy of each batting order to the opposing manager. The copy retained by the umpire shall be the official batting order. The tender of the batting order by the umpire shall establish the batting orders. Thereafter, no substitutions shall be made by either manager, except as provided in the rules.

(d) As soon as the home team's batting order is handed to the umpire-in-chief the umpires are in charge of the playing field and from that moment they shall have sole authority to determine when a game shall be called, suspended or resumed on account of weather or the condition of the playing field.

Obvious errors in the batting order, which are noticed by the umpire-in-chief before he calls "Play" for the start of the game, should be called to the attention of the manager or captain of the team in error, so the correction can be made before the game starts. For example, if a manager has inadvertently listed only eight men in the batting order, or has listed two players with the same last name but without an identifying initial and the errors are noticed by the umpire before he calls "play," he shall cause such error or errors to be corrected before he calls "play" to start the game. Teams should not be "trapped" later by some mistake that obviously was inadvertent and which can be corrected before the game starts.

4.02 The players of the home team shall take their defensive positions, the first batter of the visiting team shall take his position in the batter's box, the umpire shall call "Play" and the game shall start.

4.03 When the ball is put in play at the start of, or during a game, all fielders other than the catcher shall be on fair territory.

(a) The catcher shall station himself directly back of the plate. He may leave his position at any time to catch a pitch or make a play except that when the batter is being given an intentional base on balls, the catcher must stand with both feet within the lines of the catcher's box until the ball leaves the pitcher's hand.

Penalty: Balk.

(b) The pitcher, while in the act of delivering the ball to the batter, shall take his legal position;

(c) Except the pitcher and the catcher, any fielder may station himself anywhere in fair territory;

4.04 The batting order shall be followed throughout the game unless a player is substituted for another. In that case the substitute shall take the place of the replaced player in the batting order.

4.05 (a) The offensive team shall station two base coaches on the field during its term at bat, one near first base and one near third base.

(b) Base coaches shall be limited to two in number and shall (1) be in team uniform, and (2) remain within the coach's box at all times.

Penalty: The offending base coach shall be removed from the game, and shall leave the playing field.

It has been common practice for many years for some coaches to put one foot outside the coach's box or stand astride or otherwise be slightly outside the coaching box lines. The coach shall not be considered out of the box unless the opposing manager complains, and then, the umpire shall strictly enforce the rule and require all coaches (on both teams) to remain in the coach's box at all times.

It is also common practice for a coach who has a play at his base to leave the coach's box to signal the player to slide, advance or return to a base. This may be allowed if the coach does not interfere with the play in any manner.

4.06 (a) No manager, player, substitute, coach, trainer or batboy shall at any time, whether from the bench, the coach's box or on the playing field or elsewhere —

(1) Incite, or try to incite, by word or sign a demonstration by spectators;

(2) Use language which will in any manner refer to or reflect upon opposing players, an umpire, or any spectator;

(3) Call "Time," or employ any other word or phrase or commit any act while the ball is alive and in play for the obvious purpose of trying to make the pitcher commit a balk.

(4) Make intentional contact with the umpire in any manner.

(b) No fielder shall take a position in the batter's line of vision, and with deliberate unsportsmanlike intent, act in a manner to distract the batter.

Penalty: The offender shall be removed from the game and shall leave the playing field, and, if a balk is made, it shall be nullified.

4.07 When a manager, player, coach or trainer is ejected from a game, he shall leave the field immediately and take no further part in that game. He shall remain in the club house or change to street clothes and either leave the park or take a seat in the grandstand well removed from the vicinity of his team's bench or bullpen.

If a manager, coach or player is under suspension he may not be in the dugout or press box during the course of a game.

4.08 When the occupants of a player's bench show violent disapproval of an umpire's decision, the umpire shall first give warning that such disapproval shall cease. If such action continues —

Penalty: The umpire shall order the offenders from the bench to the club house. If he is unable to detect the offender, or offenders, he may clear the bench of all substitute players. The manager of the offending team shall have the privilege of recalling to the playing field only those players needed for substitution in the game.

4.09 HOW A TEAM SCORES.

(a) One run shall be scored each time a runner legally advances to and touches first, second, third and home base before three men are put out to end the inning.
EXCEPTION: A run is not scored if the runner advances to home base during a play in which the third out is made (1) by the batter-runner before he touches first base; (2) by any runner being forced out; or (3) by a preceding runner who is declared out because he failed to touch one of the bases.

(b) When the winning run is scored in the last half-inning of a regulation game, or in the last half of an extra inning, as the result of a base on balls, hit batter or any other play with the bases full which forces the runner on third to advance, the umpire shall not declare the game ended until the runner forced to advance from third has touched home base and the batter-runner has touched first base.

An exception will be if fans rush onto the field and physically prevent the runner from touching home plate or the batter from touching first base. In such cases, the umpires shall award the runner the base because of the obstruction by the fans.

Penalty: If the runner on third refuses to advance to and touch home base in a reasonable time, the umpire shall disallow the run, call out the offending player and order the game resumed. If, with two out, the batter-runner refuses to advance to and touch first base, the umpire shall disallow the run, call out the offending player, and order the game resumed. If, before two are out, the batter-runner refuses to advance to and touch first base, the run shall count, but the offending player shall be called out.

APPROVED RULING: No run shall score during a play in which the third out is made by the batter-runner before he touches first base.

Example: One out, Jones on second, Smith on first. The batter, Brown, hits safely. Jones scores. Smith is out on the throw to the plate. Two outs. But Brown missed first base. The ball is thrown to first, an appeal is made, and Brown is out. Three outs. Since Jones crossed the plate during a play in which the third out was made by the batter-runner before he touched first base, Jones' run does not count.

APPROVED RULING: Following runners are not affected by an act of a preceding runner unless two are out.

Example: One out, Jones on second, Smith on first and batter Brown hits home run inside the park. Jones fails to touch third on his way to the plate. Smith and Brown score. The defense holds the ball on third, appeals to umpire, and Jones is out. Smith's and Brown's runs count.

APPROVED RULING: Two outs, Jones on second, Smith on first and batter, Brown, hits home run inside the park. All three runs cross the plate. But Jones missed third base, and on appeal is declared out. Three outs. Smith's and Brown's runs are voided. No score on the play.

APPROVED RULING: One out, Jones on third, Smith on second. Batter Brown flies out to centerfield. Two outs. Jones scores after catch and Smith scores on bad throw to plate. But Jones, on appeal, is adjudged to have left third before the catch and is out. Three outs. No runs.

APPROVED RULING: Two outs, bases full, batter hits home run over fence. Batter on appeal, is declared out for missing first base. Three outs. No run counts.

Here is a general statement that covers:

When a runner misses a base and a fielder holds the ball on a missed base or on the base originally occupied by the runner if a fly ball is caught, and appeals for the umpire's decision, the runner is out when the umpire sustains the appeal; all runners may score if possible, except that with two out the runner is out at the moment he misses the bag, if an appeal is sustained as applied to the following runners.

APPROVED RULING: One out, Jones on third, Smith on first, and Brown flies out to right field. Two outs. Jones tags up and scores after the catch. Smith attempted to return to first but the right fielder's throw beat him to the base. Three outs. But Jones had scored before the throw to catch Smith off first base, hence Jones' run counts. It was not a force play.

4.10 (a) A regulation game consists of nine innings, unless extended because of a tie score, or shortened (1) because the home team needs none of its half of the ninth inning or only a fraction of it, or (2) because the umpire calls the game. EXCEPTION: National Association leagues may adopt a rule providing that one or both games of a double-header shall be seven innings in length. In such games, any of these rules applying to the ninth inning shall apply to the seventh inning.

(b) If the score is tied after nine completed innings play shall continue until (1) the visiting team has scored more total runs than the home team at the end of a completed inning, or (2) the home team scores the winning run in an uncomplete inning.

(c) If a game is called, it is a regulation game:
- (1) If five innings have been completed;
- (2) If the home team has scored more runs in four or four and a fraction half innings than the visiting team has scored in five completed half-innings;
- (3) If the home team scores one or more runs in its half of the fifth inning to tie the score.

(d) If a regulation game is called with the score tied, it shall become a suspended game. See Rule 4.12.

TIE GAME (All Divisions) — To interpret baseball Rule 4.10 (d), in case of a "tie game" the results are entered into league records as a "tie game" and are so indicated in league standings. After the regular season is concluded if the tie game affects the league standing of either team involved, the game is **replayed** as a new game. Pitching eligibility for the replay is determined according to the calendar week in which the game is replayed. In order for a game to be declared a tie game by the umpire it must be a regulation game.

NOTE: This applies to local league games only.

(e) If a game is called before it has become a regulation game, the umpire shall declare it "No Game."

NO GAME (All Divisions) — If a **Cal Ripken Division** game fails to reach the regulation minimum limit of 3½ or 4 innings played, it is not a regulation game and must be **replayed** as a new game. If a **13-15** or **16-18 Division** game fails to reach the regulation minimum of 4½ or 5 innings played it is not a regulation game and must be replayed as a new game.

According to baseball Rule 4.10 (e) if it is declared "No Game" by the umpire, no records (pitching or otherwise) are kept and pitching eligiblity, etc., is intact as it was prior to the beginning of the "No Game" situation. It is as if no pitch was thrown, no ball hit or caught.

NOTE: This applies to local league games only.

(f) Rain checks will not be honored for any regulation or suspended game which has progressed to or beyond a point of play described in 4.10(c).

4.11 The score of a regulation game is the total number of runs scored by each team at the moment the game ends.

(a) The game ends when the visiting team completes its half of the ninth inning if the home team is ahead.

(b) The game ends when the ninth inning is completed, if the visiting team is ahead.

(c) If the home team scores the winning run in its half of the ninth inning (or its half of an extra inning after a tie), the game ends immediately when the winning run is scored. EXCEPTION: If the last batter in a game hits a home run out of the playing field, the batter-runner and all runners on base are permitted to score, in accordance with the base-running rules, and the game ends when the batter- runner touches home plate.

APPROVED RULING: The batter hits a home run out of the playing field to win the game in the last half of the ninth or an extra inning, but is called out for passing a preceding runner. The game ends immediately when the winning run is scored, unless there are two out and the winning run has not yet reached home plate when the runner passes another, in which case the inning is over and only those runs that scored before the runner passes another shall count.

(d) A called game ends at the moment the umpire terminates play, unless it becomes a suspended game pursauant to Rule 4.12(a):

(1) The visiting team has scored one or more runs to tie the score and the home team has not scored;

(2) The visiting team has scored one or more runs to take the lead and the home team has not tied the score or retaken the lead.

National Association Leagues may also adopt the following rules for suspended games in addition to 4.11(d) (1) and (2) above. (If adopted by a National Association League, Rule 4.10 (c), (d) and (e) would not apply to their games.):

(3) The game has not become a regulation game (41/2 innings with the home team ahead, or 5 innings with the visiting club ahead or tied.)

(4) Any regulation game tied at the point play is stopped because of weather, curfew or other reason.

(5) If a game is suspended before it becomes a regulation game, and is continued prior to another regularly scheduled game, the regularly scheduled game will be limited to seven innings.

(6) If a game is suspended after it is a regulation game, and is continued prior to another regularly scheduled game, the regularly scheduled game will be a nine inning game.

EXCEPTION: The above sections (3), (4), (5) and (6) will not apply to the last scheduled game between the two teams during the championship season, or League Playoffs.

Any suspended game not completed prior to the last scheduled game between the two teams during the championship season, will become a called game.

4.12 SUSPENDED GAMES.

(a) A game shall become a suspended game that must be completed at a future date if the game is terminated for any of the following reasons:

(1) A curfew imposed by law;
(2) A time limit permissible under league rules;
(3) Light failure or malfunction of a mechanical field device under control of the home club. (Mechanical field device shall include automatic tarpaulin or waterremoval equipment);
(4) Darkness, when a law prevents the lights from being turned on;
(5) Weather, if a regulation game is called while an inning is in progress and before the inning is completed, and the visiting team has scored one or more runs to take the lead, and the home team has not retaken the lead; or
(6) It is a regulation game that is called with the score tired.

National Association Leagues may also adopt the following rules for suspended games. (If adopted by a National Association League, Rule 4.10(e) would not apply to their games.):

(7) The game has not become a regulation game (4 ½ innings with the home team ahead, or 5 innings with the visiting club ahead or tied).
(8) If a game is suspended before it becomes a regulation game, and is continued prior to another regularly scheduled game, the regularly scheduled game will be limited to seven innings.
(9) If a game is suspended after it is a regulation game, and is continued prior to another regularly scheduled game, the regularly scheduled game will be a nine inning game.

EXCEPTION: Optional Rules 4.12(a)(7), 4.12(a)(8) and 4.12(a)(9) for National Association Leagues will not apply to the last scheduled game between the two teams during the championship season or league playoffs.

No game called because of a curfew (Rule 4.12(a)(1), weather (Rule 4.12(a)(5), a time limit (Rule 4.12(a)(2) or with a tied score (Rule 4.12(a)(6) shall be a suspended game unless it has progressed far enough to have been a regulation game pursuant to Rule 4.10(c). A game called pursuant to Rules 4.12(a)(3) or 4.12(a)(4) shall be a suspended game at any time after it starts.

NOTE: Weather and similar conditions — 4.12(a) (1) through 4.12(a)(5) — shall take precedence in determining whether a called game shall be a suspended game. If a game is halted by weather, and subsequent light failure or an intervening curfew on time limit prevents its resumption, the game shall not be a suspended game. If a game is halted by light failure, and weather or field conditions prevent its resumption, the game shall not be a suspended game. A game can only be considered a suspended game if stopped for any of the six reasons specified in Rule 4.12(a).

(b) A suspended game shall be resumed and completed as follows:

(1) Immediately preceding the next scheduled single game between the two clubs on the same grounds; or
(2) Immediately preceding the next scheduled doubleheader between the two clubs on the same grounds, if no single game remains on the schedule; or
(3) If suspended on the last scheduled date between the two clubs in that city, transferred and played on the grounds of the opposing club, if possible;

(i) Immediately preceding the next scheduled single game, or
(ii) Immediately preceding the next scheduled doubleheader, if no single game remains on the schedule.

(4) Any suspended game not completed prior to the last scheduled game between the two teams during the championship season shall become a called game as follows:

(i) If such game has progressed far enough to become a regulation game, and one team is ahead, the team that is ahead shall be declared the winner; unless the game is called while an inning is in progress and before the inning is completed, and the visiting team has scored one or more runs to take the lead, and the home team has not retaken the lead, in which case the score upon the completion of the last full inning shall stand for purposes of this Rule 4.12(b)(4));

(ii) If such game has progressed far enough to become a regulation game, and the score is tied, the game shall be declared a "tie game" (unless the game is called while an inning is in progress and before the inning is completed, and the visiting team has scored one or more runs to tie the game, and the home team has not retied the game, in which case the score upon the completion of the last full inning shall stand for purposes of this Rule 4.12(b)(4)). A tie game is to be replayed in its entirety, unless the league president determines that playing the rescheduled game is not necessary to affect the league championship; or

(iii) If such game has not progressed far enough to become a regulation game, the game shall be declared "No Game." In such case, the game is to be replayed in its entirety, unless the league president determines that playing the rescheduled game is not necessary to affect the league championship.

(c) A suspended game shall be resumed at the exact point of suspension of the original game. The completion of a suspended game is a continuation of the original game. The lineup and batting order of both teams shall be exactly the same as the lineup and batting order at the moment of suspension, subject to the rules governing substitution. Any player may be replaced by a player who had not been in the game prior to the suspension. No player removed before the suspension may be returned to the lineup.

A player who was not with the club when the game was suspended may be used as a substitute, even if he has taken the place of a player no longer with the club who would not have been eligible because he had been removed from the lineup before the game was suspended.

Rule 4.12(c) Comment: If immediately prior to the call of a suspended game, a substitute pitcher has been announced but has not retired the side or pitched until the batter becomes a baserunner, such pitcher, when the suspended game is later resumed may, but is not required to start the resumed portion of the game. However, if he does not start he will be considered as having been substituted for and may not be used in that game.

(d) Rain checks will not be honored for any regulation or suspended game that has progressed to or beyond a point of play described in 4.10(c).

4.13 RULES GOVERNING DOUBLEHEADERS.

(a) (1) Only two championship games shall be played on one date. Completion of a suspended game shall not violate this rule.

(2) If two games are scheduled to be played for one admission on one date, the first game shall be the regularly scheduled game for that date.

(b) After the start of the first game of a doubleheader, that game shall be completed before the second game of the doubleheader shall begin.

(c) The second game of a doubleheader shall start 20 minutes after the first game is completed, unless a longer interval (not to exceed 30 minutes) is declared by the umpire-in-chief and announced to the opposing managers at the end of the first game. EXCEPTION: If the league president has approved a request of the home club for a longer interval between games for some special event, the umpire-in-chief shall declare such longer interval and announce it to the opposing manager. The umpire-in-chief of the first game shall be the timekeeper controlling the interval between games.

(d) The umpire shall start the second game of a doubleheader, if at all possible, and play shall continue as long as ground conditions, local time restrictions, or weather permit.

(e) When a regularly scheduled doubleheader is delayed in starting for any cause, any game that is started is the first game of the doubleheader.

(f) When a rescheduled game is part of a doubleheader the rescheduled game shall be the second game, and the first game shall be the regularly scheduled game for that date.

4.14 The umpire-in-chief shall order the playing field lights turned on whenever in his opinion darkness makes further play in daylight hazardous.

4.15 A game may be forfeited to the opposing team when a team —

(a) Fails to appear upon the field, or being upon the field, refuses to start play within five minutes after the umpire has called "Play" at the appointed hour for beginning the game, unless such delayed appearance is, in the umpire's judgment, unavoidable;

(b) Employs tactics palpably designed to delay or shorten the game;

(c) Refuses to continue play during a game unless the game has been suspended or terminated by the umpire;

(d) Fails to resume play, after a suspension, within one minute after the umpire has called "Play";

(e) After warning by the umpire, willfully and persistently violates any rules of the game;

(f) Fails to obey within a reasonable time the umpire's order for removal of a player from the game;

(g) Fails to appear for the second game of a doubleheader within twenty minutes after the close of the first game unless the umpire-in-chief of the first game shall have extended the time of the intermission.

4.16 A game shall be forfeited to the visiting team if, after it has been suspended, the orders of the umpire to groundskeepers respecting preparation of the field for resumption of play are not complied with.

4.17 A game shall be forfeited to the opposing team when a team is unable or refuses to place nine players on the field.

4.18 If the umpire declares a game forfeited he shall transmit a written report to the league president within twenty-four hours thereafter, but failure of such transmittal shall not effect the forfeiture.

4.19 PROTESTING GAMES. Each league shall adopt rules governing procedure for protesting a game, when a manager claims that an umpire's decision is in violation of these rules. No protest shall ever be permitted on judgement decisions by the umpire. In all protested games, the decision of the League President shall be final.

Even if it is held that the protested decision violated the rules, no replay of the game will be ordered unless in the opinion of the League President the violation adversely affected the protesting team's chances of winning the game.

Whenever a manager protests a game because of alleged misapplication of the rules the protest will not be recognized unless the umpires are notified at the time the play under protest occurs and before the next pitch is made or a runner is retired. A protest arising on a game-ending play may be filed until 12:00 noon the following day with the League Office.

5.00 — Putting the Ball in Play. Live Ball.

5.01 At the time set for beginning the game the umpire shall call "Play."

5.02 After the umpire calls "Play" the ball is alive and in play and remains alive and in play until for legal cause, or at the umpire's call of "Time" suspending play, the ball becomes dead. While the ball is dead no player may be put out, no bases may be run and no runs may be scored, except that runners may advance one or more bases as the result of acts which occurred while the ball was alive (such as, but not limited to a balk, an overthrow, interference, or a home run or other fair ball hit out of the playing field).

Should a ball come partially apart in a game, it is in play until the play is completed.

5.03 The pitcher shall deliver the pitch to the batter who may elect to strike the ball, or who may not offer at it, as he chooses.

5.04 The offensive team's objective is to have its batter become a runner, and its runners advance.

5.05 The defensive team's objective is to prevent offensive players from becoming runners, and to prevent their advance around the bases.

5.06 When a batter becomes a runner and touches all bases legally he shall score one run for his team.

A run legally scored cannot be nullified by subsequent action of the runner such as but not limited to an effort to return to third base in the belief that he had left the base before a caught fly ball.

5.07 When three offensive players are legally put out, that team takes the field and the opposing team becomes the offensive team.

5.08 If a thrown ball accidentally touches a base coach, or a pitched or thrown ball touches an umpire, the ball is alive and in play. However, if the coach interferes with a thrown ball, the runner is out.

5.09 The ball becomes dead and runners advance one base, or return to their bases, without liability to be put out, when —

(a) A pitched ball touches a batter, or his clothing, while in his legal batting position; runners, if forced, advance;

(b) The plate umpire interferes with the catcher's throw; runners may not advance.

NOTE: The interference shall be disregarded if the catcher's throw retires the runner.

(c) A balk is committed; runners advance; (See Penalty 8.05).

(d) A ball is illegally batted; runners return;

(e) A foul ball is not caught; runners return. The umpire shall not put the ball in play until all runners have retouched their bases;

(f) A fair ball touches a runner or an umpire on fair territory before it touches an infielder including the pitcher, or touches an umpire before it has passed an infielder other than the pitcher, runners advance, if forced.

If a fair ball goes through, or by, an infielder, no other infielder has a chance to make a play on the ball and the ball touches a runner immediately behind the infielder that the ball went throught, or by, the ball is in play and the umpire shall not declare the runner out. If a fair ball touches a runner after being deflected by an infielder, the ball is in play and the umpire shall not declare the runner out;

Rule 5.09(f) Comment: If a fair ball touches an umpire working in the infield after it has bounded past, or over, the pitcher, it is a dead ball. If a batted ball is deflected by a fielder in fair territory and hits a runner or an umpire while still in flight and then caught by an infielder it shall not be a catch, but the ball shall remain in play.

If a fair ball goes through, or by, an infielder, and touches a runner immediately back of him, or touches a runner after being deflected by an infielder, the ball is in play and the umpire shall not declare the runner out. In making such decision the umpire must be convinced that the ball passed through, or by, the infielder and that no other infielder had the chance to make a play on the ball, runners advance, if forced;

(g) A pitched ball lodges in the umpire's or catcher's mask or paraphernalia, and remains out of play, runners advance one base.

If a foul tip hits the umpire and is caught by a fielder on the rebound, the ball is "dead" and the batsman cannot be called out. The same shall apply where such foul tip lodges in the umpire's mask or other paraphernalia.

If a third strike (not a foul tip) passes the catcher and hits an umpire, the ball is in play. If such ball rebounds and is caught by a fielder before it touches the ground, the batsman is not out on such a catch, but the ball remains in play and the batsman may be retired at first, or touched with the ball for the out.

If a pitched ball lodges in the umpire's or catcher's mask or paraphernalia, and remains out of play, on the third strike or fourth ball, then the batter is entitled to first base and all runners advance one base. If the count on the batter is less than three balls, runners advance one base.

(h) Any legal pitch touches a runner trying to score, runners advance.

5.10 The ball becomes dead when an umpire calls "Time." The umpire-in-chief shall call "Time" —

(a) When in his judgment weather, darkness or similar conditions make immediate further play impossible;

(b) When light failure makes it difficult or impossible for the umpires to follow the play;

NOTE: A league may adopt its own regulations governing games interrupted by light failure.

(c) When an accident incapacitates a player or an umpire;

(1) If an accident to a runner is such as to prevent him from proceeding to a base to which he is entitled, as on a home run hit out of the playing field, or an award of one or more bases, a substitute runner shall be permitted to complete the play.

(d) When a manager requests "Time" for a substitution, or for a conference with one of his players;

(e) When the umpire wishes to examine the ball, to consult with either manager, or for any similar cause;

(f) When a fielder, after catching a fly ball, falls into a bench or stand, or falls across ropes into a crowd when spectators are on the field. As pertains to runners, the provisions of 7.04(c) shall prevail.

If a fielder after making a catch steps into a bench, but does not fall, the ball is in play and runners may advance at their own peril.

(g) When an umpire orders a player or any other person removed from the playing field.

(h) Except in the cases stated in paragraphs (b) and (c) (1) of this rule, no umpire shall call "Time" while a play is in progress.

5.11 After the ball is dead, play shall be resumed when the pitcher takes his place on the pitcher's plate with a new ball or the same ball in his possession and the plate umpire calls "Play." The plate umpire shall call "Play" as soon as the pitcher takes his place on the plate with the ball in his possession.

6.00 — The Batter.

6.01 (a) Each player of the offensive team shall bat in the order that his name appears in his team's batting order.

(b) The first batter in each inning after the first inning shall be the player whose name follows that of the last player who legally completed his time at bat in the preceding inning.

6.02 (a) The batter shall take his position in the batter's box promptly when it is his time at bat.

(b) The batter shall not leave his position in the batter's box after the pitcher comes to Set Position, or starts his windup.

Penalty: If the pitcher pitches, the umpire shall call "Ball" or "Strike," as the case may be.

The batter leaves the batter's box at the risk of having a strike delivered and called, unless he requests the umpire to call "Time." The batter is not at liberty to step in and out of the batter's box at will.

Once a batter has taken his position in the batter's box, he shall not be permitted to step out of the batter's box in order to use the resin or the pine tar rag, unless there is a delay in the game action or, in the judgment of the umpires, weather conditions warrant an exception.

Umpires will not call "Time" at the request of the batter or any member of his team once the pitcher has started his windup or has come to a set position even though the batter claims "dust in his eyes," "steamed glasses," "didn't get the sign," or for any other cause.

Umpires may grant a hitter's request for "Time" once he is in the batter's box, but the umpire should eliminate hitters walking out of the batter's box without reason. If umpires are not lenient, batters will understand that they are in the batter's box and they must remain there until the ball is pitched.

If pitcher delays once the batter is in his box and the umpire feels that the delay is not justified he may allow the batter to step out of the box momentarily.

If after the pitcher starts his windup or comes to a "set position" with a runner on, he does not go through with his pitch because the batter has stepped out of the box, it shall not be called a balk. Both the pitcher and batter have violated a rule and the umpire shall call time and both the batter and pitcher start over from "scratch."

(c) If the batter refuses to take his position in the batter's box during his time at bat, the umpire shall call a strike on the batter. The ball is dead, and no runners may advance. After the penalty, the batter may take his proper position and the regular ball and strike count shall continue. If the batter does not take his proper position before three strikes have been called, the batter shall be declared out.

Rule 6.02(c) Comment: The umpire shall give the batter a reasonable opportunity to take his proper position in the batter's box after the umpire has called a strike pursuant to Rule 6.02(c) and before the umpire calls a successive strike pursuant to Rule 6.02(c).

6.03 The batter's legal position shall be with both feet within the batter's box.

APPROVED RULING: The lines defining the box are within the batter's box.

6.04 A batter has legally completed his time at bat when he is put out or becomes a runner.

6.05 A batter is out when —

(a) His fair or foul fly ball (other than a foul tip) is legally caught by a fielder;

Rule 6.05(a) Comment: A fielder may reach into, but not step into, a dugout to make a catch, and if he holds the ball, the catch shall be allowed. A fielder, in order to make a catch on a foul ball nearing a dugout or other out-of-play area (such as the stands), must have one or both feet on or over the playing surface (including the lip of the dugout) and neither foot on the ground inside the dugout or in any other out-of-play area. Ball is in play, unless the fielder, after making a legal catch, falls into a dugout or other out-of-play area, in which case the ball is dead. Status of runners shall be as described in Rule 7.04(c) Comment.

(b) A third strike is legally caught by the catcher.

"Legally caught" means in the catcher's glove before the ball touches the ground. It is not legal if the ball lodges in his clothing or paraphernalia; or if it touches the umpire and is caught by the catcher on the rebound.

If a foul-tip first strikes the catcher's glove and then goes on through and is caught by both hands against his body or protector, before the ball touches the ground, it is a strike, and if third strike, batter is out. If smothered against his body or protector, it is a catch provided the ball struck the catcher's glove or hand first.

(c) A third strike is not caught by the catcher when first base is occupied before two are out;

(d) He bunts foul on third strike;

(e) An Infield fly is declared;

(f) He attempts to hit a third strike and the ball touches him;

(g) His fair ball touches him before touching a fielder. If the batter is in a legal position in the batter's box, see Rule 6.03, and, in the umpire's judgment, there was no intention to interfere with the course of the ball, a batted ball that strikes the batter or his bat shall be ruled a foul ball;

(h) After hitting or bunting a fair ball, his bat hits the ball a second time in fair territory. The ball is dead and no runners may advance. If the batter-runner drops his bat and the ball rolls against the bat in fair territory and, in the umpire's judgment, there was no intention to interfere with the course of the ball, the ball is alive and in play. If the batter is in a legal position in the batter's box, see Rule 6.03, and, in the umpire's judgment, there was no intention to interfere with the course of the ball, a batted ball that strikes the batter or his bat shall be ruled a foul ball;

If a bat breaks and part of it is in fair territory and is hit by a batted ball or part of it hits a runner or fielder, play shall continue and no interference be called. If batted ball hits part of broken bat in foul territory, it is a foul ball.

If a whole bat is thrown into fair or foul territory and interferes with a defensive player attempting to make a play, interference shall be called, whether intentional or not.

In cases where the batting helmet is accidently hit with a batted or thrown ball, the ball remains in play the same as if it has not hit the helmet.

If a batted ball strikes a batting helmet or any other object foreign to the natural ground while in foul territory, it is a foul ball and the ball is dead.

If, in the umpire's judgment, there is intent on the part of a baserunner to interfere with a batted or thrown ball by dropping the helmet or throwing it at the ball, then the runner would be out, the ball is dead and runners would return to last base legally touched.

(i) After hitting or bunting a foul ball, he intentionally deflects the course of the ball in any manner while running to first base. The ball is dead and no runners may advance.

(j) After a third strike or after he hits a fair ball, he or first base is tagged before he touches first base;

(k) In running the last half of the distance from home base to first base, while the ball is being fielded to first base, he runs outside (to the right of) the three-foot line, or inside (to the left of) the foul line and the umpire's judgment in so doing interferes with the fielder taking the throw at first base; except that he may run outside (to the right of) the three-foot line or inside (to the left of) the foul line to avoid a fielder attempting to field a batted ball.

Rule 6.05(k) Comment: The lines marking the three-foot lane are a part of that lane and a batter-runner is required to have both feet within the three-foot lane or on the lines marking the lane. The batter-runner is permitted to exit the three-foot lane by means of a step, stride, reach or slide in the immediate vicinity of first base for the sole purpose of touching first base.

(l) An infielder intentionally drops a fair fly or line drive, with first, first and second, first and third, or first, second and third base occupied before two are out. The ball is dead and runner or runners shall return to their original base or bases.

APPROVED RULING: In this situation, the batter is not out if the infielder permits the ball to drop untouched to the ground, except when the Infield Fly rule applies.

(m) A preceding runner shall, in the umpire's judgment, intentionally interfere with a fielder who is attempting to catch a thrown ball or to throw a ball in an attempt to complete any play;

The objective of this rule is to penalize the offensive team for deliberate, unwarranted, unsportsmanlike action by the runner in leaving the baseline for the obvious purpose of crashing the pivot man on a double play, rather than trying to reach the base. Obviously this is an umpire's judgment play.

CONTACT RULE (All Babe Ruth and Cal Ripken Baseball Divisions) — If a runner attempting to reach home plate intentionally and maliciously runs into a defensive player in the area of home plate, he will be called out on the play and ejected from the game. The objective of this rule is to penalize the offensive team for crashing the defensive player, rather than trying to reach home plate. Obviously, this is an umpire's judgment call.

(n) With two out, a runner on third base, and two strikes on the batter, the runner attempts to steal home base on a legal pitch and the ball touches the runner in the batter's strike zone. The umpire shall call "Strike Three," the batter is out and the run shall not count; before two are out, the umpire shall call "Strike Three," the ball is dead, and the run counts.

6.06 A batter is out for illegal action when —

(a) He hits a ball with one or both feet on the ground entirely outside the batter's box.

If a batter hits a ball fair or foul while out of the batter's box, he shall be called out. Umpires should pay particular attention to the position of the batter's feet if he attempts to hit the ball while he is being intentionally passed. A batter cannot jump or step out of the batter's box and hit the ball.

(b) He steps from one batter's box to the other while the pitcher is in position ready to pitch;

(c) He interferes with the catcher's fielding or throwing by stepping out of the batter's box or making any other movement that hinders the catcher's play at home base.
EXCEPTION: Batter is not out if any runner attempting to advance is put out, or if runner trying to score is called out for batter's interference.

If the batter interferes with the catcher, the plate umpire shall call "interference." The batter is out and the ball is dead. No player may advance on such interference (offensive interference) and all runners must return to the last base that was, in the judgment of the umpire, legally touched at the time of the interference.

If, however, the catcher makes a play and the runner attempting to advance is put out, it is to be assumed there was no actual interference and that runner is out — not the batter. Any other runners on the base at the time may advance as the ruling is that there is not actual interference if a runner is retired. In that case play proceeds just as if no violation had been called.

If a batter strikes at a ball and misses and swings so hard he carries the bat all the way around and, in the umpire's judgment, unintentionally hits the catcher or the ball in back of him on the back swing, it shall be called a strike only (not interference). The ball will be dead, however, and no runner shall advance on the play.

(d) He uses or attempts to use a bat that, in the umpire's judgment, has been altered or tampered with in such a way to improve the distance factor or cause an unusual reaction on the baseball. This includes, bats that are filled, flat-surfaced, nailed, hollowed, grooved or covered with a substance such as paraffin, wax, etc. No advancement on the bases will be allowed and any out or outs made during a play shall stand.

In addition to being called out, the player shall be ejected from the game and may be subject to additional penalties as determined by his League President.

Rule 6.06(d) Comment: A batter shall be deemed to have used or attempted to use an illegal bat if he brings such a bat into the batter's box.

6.07 BATTING OUT OF TURN.

(a) A batter shall be called out, on appeal, when he fails to bat in his proper turn, and another batter completes a time at bat in his place.

(1) The proper batter may take his place in the batter's box at any time before the improper batter becomes a runner or is put out, and any balls and strikes shall be counted in the proper batter's time at bat.

(b) When an improper batter becomes a runner or is put out, and the defensive team appeals to the umpire before the first pitch to the next batter of either team, or before any play or attempted play, the umpire shall (1) declare the proper batter out; and (2) nullify any advance or score made because of a ball batted by the improper batter or because of the improper batter's advance to first base on a hit, an error, a base on balls, a hit batter or otherwise.

NOTE: If a runner advances, while the improper batter is at bat, on a stolen base, balk, wild pitch or passed ball, such advance is legal.

(c) When an improper batter becomes a runner or is put out, and a pitch is made to the next batter of either team before an appeal is made, the improper batter thereby becomes the proper batter, and the results of his time at bat becomes legal.

(d) (1) When the proper batter is called out because he has failed to bat in turn, the next batter shall be the batter whose name follows that of the proper batter thus called out; (2) When an improper batter becomes a proper batter because no appeal is made before the next pitch, the next batter shall be the batter whose name follows that of such legalized improper batter. The instant an improper batter's actions are legalized, the batting order picks up with the name following that of the legalized improper batter.

The umpire shall not direct the attention of any person to the presence in the batter's box of an improper batter. This rule is designed to require constant vigilance by the players and managers of both teams.

There are two fundamentals to keep in mind: When a player bats out of turn, the proper batter is the player called out. If an improper batter bats and reaches base or is out and no appeal is made before a pitch to the next batter, or before any play or attempted play, that improper batter is considered to have batted in proper turn and establishes the order that is to follow.

APPROVED RULING

To illustrate various situations arising from batting out of turn, assume a first-inning batting order as follows:

Abel-Baker-Charles-Daniel-Edward-Frank-George-Hooker-Irwin

PLAY (1). *Baker bats. With the count 2 balls and 1 strike, (a) the offensive team discovers the error or (b) the defensive team appeals.* ***RULING:*** *In either case, Abel replaces Baker, with the count on him 2 balls and 1 strike.*

PLAY (2). *Baker bats and doubles. The defensive team appeals (a) immediately or (b) after a pitch to Charles.* ***RULING:*** *(a) Abel is called out and Baker is the proper batter; (b) Baker stays on second and Charles is the proper batter.*

PLAY (3). *Abel walks. Baker walks. Charles forces Baker. Edward bats in Daniel's turn. While Edward is at bat, Abel scores and Charles goes to second on a wild pitch. Edward grounds out, sending Charles to third. The defensive team appeals (a) immediately or (b) after a pitch to Daniel.* ***RULING:*** *(a) Abel's run counts and Charles is entitled to second base since these advances were not made because of the improper batter batting a ball or advancing to first base. Charles must return to second base because his advance to third resulted from the improper batter batting a ball. Daniel is called out, and Edward is the proper batter; (b) Abel's run counts and Charles stays on third. The proper batter is Frank.*

PLAY (4). *With the bases full and two out. Hooker bats in Frank's turn, and triples, scoring three runs. The defensive team appeals (a) immediately, or (b) after a pitch to George.* ***RULING:*** *(a) Frank is called out and no runs score. George is the proper batter to lead off the second inning. (B) Hooker stays on third and three runs score. Irwin is the proper batter.*

PLAY (5). *After Play (4) (b) above, George continues at bat. (a) Hooker is picked off third base for the third out, or (b) George flies out, and no appeal is made. Who is the proper leadoff batter in the second inning?* ***RULING:*** *(a) Irwin. He became the proper batter as soon as the first pitch to George legalized Hooker's triple; (b) Hooker. When no appeal was made, the first pitch to the leadoff batter of the opposing team legalized George's time at bat.*

PLAY (6). *Daniel walks and Abel comes to bat. Daniel was an improper batter, and if an appeal is made before the first pitch to Abel, Abel is out, Daniel is removed from base, and Baker is the proper batter. There is no appeal, and a pitch is made to Abel. Daniel's walk is now legalized, and Edward thereby becomes the proper batter. Edward can replace Abel at any time before Abel is put out or becomes a runner. He does not do so. Abel flies out, and Baker comes to bat. Abel was an improper batter, and if an appeal is made before the first pitch to Baker, Edward is out, and the proper batter is Frank. There is no appeal, and a pitch is made to Baker. Abel's out is now legalized, and the proper batter is Baker. Baker walks. Charles is the proper batter. Charles flies out. Now Daniel is the proper batter, but he is on second base. Who is the proper batter?* ***RULING:*** *The proper batter is Edward. When the proper batter is on base, he is passed over, and the following batter becomes the proper batter.*

6.08 The batter becomes a runner and is entitled to first base without liability to be put out (provided he advances to and touches first base) when —

(a) Four "balls" have been called by the umpire;

A batter who is entitled to first base because of a base on balls, must go to first base and touch the base before other base runners are forced to advance. This applies when bases are full and applies when a substitute runner is put into the game.

If, in advancing, the base runner thinks there is a play and he slides past the base before or after touching it, he may be put out by the fielder tagging him. If he fails to touch the base to which he is entitled and attempts to advance beyond that base he may be put out by tagging him or the base he missed.

(b) He is touched by a pitched ball which he is not attempting to hit unless (1) the ball is in the strike zone when it touches the batter, or (2) the batter makes no attempt to avoid being touched by the ball;

If the ball is in the strike zone when it touches the batter, it shall be called a strike, whether or not the batter tries to avoid the ball. If the ball is outside the strike zone when it touches the batter, if shall be called a ball if he makes no attempt to avoid being touched.

APPROVED RULING: When the batter is touched by a pitched ball which does not entitle him to first base, the ball is dead and no runner may advance.

(c) The catcher or any fielder interferes with him. If a play follows the interference, the manager of the offense may advise the plate umpire that he elects to decline the interference penalty and accept the play. Such election shall be made immediately at the end of the play. However, if the batter reaches first base on a hit, an error, a base on balls, a hit batsman, or otherwise, and all other runners advance at least one base, the play proceeds without reference to the interference.

Rule 6.08(c) Comment: If catcher's interference is called with a play in progress the umpire will allow the play to continue because the manager may elect to take the play. If the batter-runner missed first base, or a runner misses his next base, he shall be considered as having reached the base, as stated in Note of Rule 7.04(d).

Examples of plays the manager might elect to take:

1. Runner on third, one out, batter hits fly ball to the outfield on which the runner scores but catcher's interference was called. The offensive manager may elect to take the run and have batter called out or have runner remain at third and batter awarded first base.

2. Runner on second base. Catcher interferes with batter as he bunts ball fairly sending runner to third base. The manager may rather have runner on third base with an out on the play than have runners on second and first.

If a runner is trying to score by a steal or squeeze from third base, note the additional penalty set forth in Rule 7.07.

If the catcher interferes with the batter before the pitcher delivers the ball, it shall not be considered interference on the batter under Rule 6.08(c). In such cases, the umpire shall call "Time" and the pitcher and batter start over from "scratch."

(d) A fair ball touches an umpire or a runner on fair territory before touching a fielder. If a fair ball touches an umpire after having passed a fielder other than the pitcher, or having touched a fielder, including the pitcher, the ball is in play.

6.09 The batter becomes a runner when —

(a) He hits a fair ball;

(b) The third strike called by the umpire is not caught, providing (1) first base is unoccupied, or (2) first base is occupied with two outs;

Rule 6.09(b) Comment: A batter who does not realize his situation on a third strike not caught, and who is not in the process of running to first base, shall be declared out once he leaves the dirt circle surrounding home plate.

(c) A fair ball, after having passed a fielder other than the pitcher, or after having been touched by a fielder, including the pitcher, shall touch an umpire or runner on fair on fair territory;

(d) A fair ball passes over a fence or into the stands at a distance from home base of 250 feet or more. Such hit entitles the batter to a home run when he shall have touched all bases legally. A fair fly ball that passes out of the playing field at a point less than 250 feet from home base shall entitle the batter to advance to second base only;

(e) A fair ball, after touching the ground, bounds into the stands, or passes through, over or under a fence, or through or under a scoreboard, or through or under shrubbery, or vines on the fence, in which case the batter and the runners shall be entitled to advance two bases;

(f) Any fair ball which, either before or after touching the ground, passes through or under a fence, or through or under a scoreboard, or through any opening in the fence or scoreboard, or through or under shrubbery, or vines on the fence, or which sticks in a fence or scoreboard, in which case the batter and the runners shall be entitled to two bases;

(g) Any bounding fair ball is deflected by the fielder into the stands, or over or under a fence on fair or foul territory, in which case the batter and all runners shall be entitled to advance two bases;

(h) Any fair fly ball is deflected by the fielder into the stands, or over the fence into foul territory, in which case the batter shall be entitled to advance to second base; but if deflected into the stands or over the fence in fair territory, the batter shall be entitled to a home run. However, should such a fair fly be deflected at a point less than 250 feet from home plate, the batter shall be entitled to two bases only.

7.00 — The Runner.

7.01 A runner acquires the right to an unoccupied base when he touches it before he is out. He is then entitled to it until he is put out, or forced to vacate it for another runner legally entitled to that base.

If a runner legally acquires title to a base, and the pitcher assumes his pitching position, the runner may not return to a previously occupied base.

CAL RIPKEN DIVISION — See Special Base Running Rule on page 13.

7.02 In advancing, a runner shall touch first, second, third and home base in order. If forced to return, he shall retouch all bases in reverse order, unless the ball is dead under any provision of Rule 5.09. In such cases, the runner may go directly to his original base.

7.03 (a) Two runners may not occupy a base, but if, while the ball is alive, two runners are touching a base, the following runner shall be out when tagged and the preceding runner is entitled to the base, unless Rule 7.03(b) applies.

(b) If a runner is forced to advance by reason of the batter becoming a runner and two runners are touching a base to which the following runner is forced, the following runner is entitled to the base and the preceding runner shall be out when tagged or when a fielder possesses the ball and touches the base to which such preceding runner is forced.

7.04 Each runner, other than the batter, may without liability to be put out, advance one base when —

(a) There is a balk;

(b) The batter's advance without liability to be put out forces the runner to vacate his base, or when the batter hits a fair ball that touches another runner or the umpire before such ball has been touched by, or has passed a fielder, if the runner is forced to advance;

A runner forced to advance without liability to be put out may advance past the base to which he is entitled only at his peril. If such a runner, forced to advance, is put out for the third out before a preceding runner, also forced to advance, touches home plate, the run shall score.

Play. Two out, bases full, batter walks but runner from second is overzealous and runs past third base toward home and is tagged out on a throw by the catcher. Even though two are out, the run would score on the theory that the run was forced home by the base on balls and that all the runners needed to do was proceed and touch the next base.

(c) A fielder, after catching a fly ball, falls into a bench or stand, or falls across ropes into a crowd when spectators are on the field;

Rule 7.04(c) Comment: If a fielder, after having made a legal catch, should fall into a stand or among spectators or into the dugout or any other out-of-play area while in possession of the ball after making a legal catch, or fall while in the dugout after making a legal catch, the ball is dead and runners shall advance one base, without liability to be put out, from his last legally touched base at the time the fielder fell into, or in, such out-of-play area.

(d) While he is attempting to steal a base, the batter is interfered with by the catcher or any other fielder.

NOTE: When a runner is entitled to a base without liability to be put out, while the ball is in play, or under any rule in which the ball is in play after the runner reaches the base to which he is entitled, and the runner fails to touch the base to which he is entitled before attempting to advance to the next base, the runner shall forfeit his exemption from liability to be put out, and he may be put out by tagging the base or by tagging the runner before he returns to the missed base.

(e) A fielder deliberately touches a pitched ball with his cap, mask or any part of his uniform detached from its proper place on his person. The ball is in play, and the award is made from the position of the runner at the time the ball was touched.

7.05 Each runner including the batter-runner may, without liability to be put out, advance —

(a) To home base, scoring a run, if a fair ball goes out of the playing field in flight and he touched all bases legally; or if a fair ball which, in the umpire's judgment, would have gone out of the playing field in flight, is deflected by the act of a fielder in throwing his glove, cap, or any article of his apparel;

(b) Three bases, if a fielder deliberately touches a fair ball with his cap, mask or any part of his uniform detached from its proper place on his person. The ball is in play and the batter may advance to home base at his peril;

(c) Three bases, if a fielder deliberately throws his glove at and touches a fair ball. The ball is in play and the batter may advance to home base at his peril;

(d) Two bases, if a fielder deliberately touches a thrown ball with his cap, mask or any part of his uniform detached from its proper place on his person. The ball is in play;

(e) Two bases, if a fielder deliberately throws his glove at and touches a thrown ball. The ball is in play;

In applying (b-c-d-e) the umpire must rule that the thrown glove or detached cap or mask has touched the ball. There is no penalty if the ball is not touched.

Under (c-e) this penalty shall not be invoked against a fielder whose glove is carried off his hand by the force of a batted or thrown ball, or when his glove flies off his hand as he makes an obvious effort to make a legitimate catch.

(f) Two bases, if a fair ball bounces or is deflected into the stands outside the first or third base foul lines; or if it goes through or under a field fence, or through or under a scoreboard, or through or under shrubbery or vines on the fence; or if it sticks in such fence, scoreboard, shrubbery or vines;

(g) Two bases when, with no spectators on the playing field, a thrown ball goes into the stands, or into a bench (whether or not the ball rebounds into the field), or over or under or through a field fence, or on a slanting part of the screen above the backstop, or remains in the meshes of a wire screen protecting spectators. The ball is dead. When such wild throw is the first play by an infielder, the umpire, in awarding such bases, shall be governed by the position of the runners at the time the ball was pitched; in all other cases the umpire shall be governed by the position of the runners at the time the wild throw was made;

APPROVED RULING: *If all runners, including the batter-runner, have advanced at least one base when an infielder makes a wild throw on the first play after the pitch, the award shall be governed by the position of the runners when the wild throw was made.*

In certain circumstances it is impossible to award a runner two bases. Example: Runner on first. Batter hits fly to short right. Runner holds up between first and second and batter comes around first and pulls up behind him. Ball falls safely. Outfielder, in throwing to first, throws ball into stands.

APPROVED RULING: Since no runner when the ball is dead, may advance beyond the base to which he is entitled, the runner originally on first base goes to third base and the batter is held at second base.

The term "when the wild throw was made" means when the throw actually left the player's hand and not when the thrown ball hit the ground, passes a receiving fielder or goes out of play into the stands.

The position of the batter-runner at the time the wild throw left the thrower's hand is the key in deciding the award of bases. If the batter-runner has not reached first base, the award is two bases at the time the pitch was made for all runners. The decision as to whether the batter-runner has reached first base before the throw is a judgment call.

If an unusual play arises where a first throw by an infielder goes into stands or dugout but the batter did not become a runner (such as catcher throwing ball into stands in attempt to get runner from third trying to score on passed ball or wild pitch) award of two bases shall be from the position of the runners at the time of the throw. (For the purpose of Rule 7.05(g) a catcher is considered an infielder.)

Play. Runner on first base, batter hits a ball to the shortstop, who throws to second base too late to get runner at second and second baseman throws toward first base after batter has crossed first base. Ruling — Runner at second scores. (On this play, only if batter-runner is past first base when throw is made he is awarded third base.)

(h) One base, if a ball, pitched to the batter, or thrown by the pitcher from his position on the pitcher's plate to a base to catch a runner, goes into a stand or a bench, or over or through a field fence or backstop. The ball is dead;

APPROVED RULING: When a wild pitch or passed ball goes through or by the catcher, or deflects off the catcher, and goes directly into the dugout, stands, above the break, or any area where the ball is dead, the awarding of bases shall be one base. One base shall also be awarded if the pitcher while in contact with the rubber, throws to a base, and the throw goes directly into the stands or into any area where the ball is dead.

If, however, the pitched or thrown ball goes through or by the catcher or through the fielder, and remains on the playing field, and is subsequently kicked or deflected into the dugout, stands or other area where the ball is dead, the awarding of bases shall be two bases from position of runners at the time of the pitch or throw.

(i) One base, if the batter becomes a runner on Ball Four or Strike Three, when the pitch passes the catcher and lodges in the umpire's mask or paraphernalia.
If the batter becomes a runner on a wild pitch which entitles the runners to advance one base, the batter-runner shall be entitled to first base only.

The fact a runner is awarded a base or bases without liability to be put out does not relieve him of the responsibility to touch the base he is awarded and all intervening bases. For example: batter hits a ground ball which an infielder throws into the stands but the batter-runner missed first base. He may be called out on appeal for missing first base after the ball is put in play even though he was "awarded" second base.

If a runner is forced to return to a base after a catch, he must retouch his original base even though, because of some ground rule or other rule, he is awarded additional bases. He may retouch while the ball is dead and the award is then made from his original base.

(j) One base, if a fielder deliberately touches a pitched ball with his cap, mask or any part of his uniform detached from its proper place on his person. The ball is in play, and the award is made from the position of the runner at the time the ball was touched.

7.06 When obstruction occurs, the umpire shall call or signal "Obstruction."

(a) If a play is being made on the obstructed runner, or if the batter-runner is obstructed before he touches first base, the ball is dead and all runners shall advance, without liability to be put out, to the bases they would have reached, in the umpire's judgment, if there had been no obstruction. The obstructed runner shall be awarded at least one base beyond the base he had last legally touched before the obstruction. Any preceding runners, forced to advance by the award of bases as the penalty for obstruction, shall advance without liability to be put out.

When a play is being made on an obstructed runner, the umpire shall signal obstruction in the same manner that he calls, "Time," with both hands overhead. The ball is immediately dead when this signal is given; however, should a thrown ball be in flight before the obstruction is called by the umpire, the runners are to be awarded such bases on wild throws as they would have been awarded had not obstruction occurred. On a play where a runner was trapped between second and third and obstructed by the third baseman going into third base while the throw is in flight from the shortstop, if such throw goes into the dugout the obstructed runner is to be awarded home base. Any other runners on base in this situation would also be awarded two bases from the base they last legally touched before obstruction was called.

(b) If no play is being made on the obstructed runner, the play shall proceed until no further action is possible. The umpire shall then call "Time" and impose such penalties, if any, as in his judgment will nullify the act of obstruction.

Under 7.06(b) when the ball is not dead on obstruction and an obstructed runner advances beyond the base which, in the umpire's judgment, he would have been awarded because of being obstructed, he does so at his own peril and may be tagged out. This is a judgment call.

NOTE: *The catcher, without the ball is his possession, has no right to block the pathway of the runner attempting to score. The baseline belongs to the runner and the catcher should be there only when he is fielding a ball or when he already has the ball in his hand.*

7.07 If, with a runner on third base and trying to score by means of a squeeze play or a steal, the catcher or any other fielder steps on, or in front of home base without possession of the ball, or touches the batter or his bat, the pitcher shall be charged with a balk, the batter shall be awarded first base on the interference and the ball is dead.

7.08 Any runner is out when —

(a) (1) He runs more than three feet away from his baseline to avoid being tagged unless his action is to avoid interference with a fielder fielding a batted ball. A runner's baseline is established when the tag attempt occurs and is a straight line from the runner to the base he is attempting to reach safely; or
(2) after touching first base, he leaves the baseline, obviously abandoning his effort to touch the next base;

Rule 7.08(a) Comment: Any runner after reaching first base who leaves the baseline heading for his dugout or his position believing that there is no further play, may be declared out if the umpire judges the act of the runner to be considered abandoning his efforts to run the bases. Even though an out is called, the ball remains in play in regard to any other runner.

This rule also covers the following and similar plays: Less than two out, score tied last of ninth inning, runner on first, batter hits a ball out of park for winning run, the runner on first passes second and thinking the home run automatically wins the game, cuts across diamond toward his bench as batter-runner circles bases. In this case, the base runner would be called out "for abandoning his effort to touch the next base" and batter-runner permitted to continue around bases to make his home run valid. If there are two out, home run would not count (see Rule 7.12). This is not an appeal play.

Play: Runner believing he is called out on a tag at first or third base starts for the dugout and progresses a reasonable distance still indicating by his actions that he is out, shall be declared out for abandoning the bases.

(b) He intentionally interferes with a thrown ball; or hinders a fielder attempting to make a play on a batted ball;

A runner who is adjudged to have hindered a fielder who is attempting to make a play on a batted ball is out whether it was intentional or not.

If, however, the runner has contact with a legally occupied base when he hinders the fielder, he shall not be called out unless, in the umpire's judgment, such hindrance, whether it occurs on fair or foul territory, is intentional. If the umpire declares the hindrance intentional, the following penalty shall apply. With less than two out, the umpire shall declare both the runner and batter out. With two out, the umpire shall declare the batter out.

If, in a run-down between third base and home plate, the succeeding runner has advanced and is standing on third base when the runner in a run-down is called out for offensive interference, the umpire shall send the runner standing on third base back to second base. This same principle applies if there is a run-down between second and third base and succeeding runner has reached second (the reasoning is that no runner shall advance on an interference play and a runner is considered to occupy a base until he legally has reached the next succeeding base).

(c) He is tagged, when the ball is alive, while off his base.

EXCEPTION: A batter-runner cannot be tagged out after overrunning or oversliding first base if he returns immediately to the base.

APPROVED RULING: (1) If the impact of a runner breaks a base loose from its position, no play can be made on that runner at that base if he had reached the base safely.

APPROVED RULING: (2) If a base is dislodged from its position during a play, any following runner on the same play shall be considered as touching or occupying the base if, in the umpire's judgment, he touches or occupies the point marked by the dislodged base.

(d) He fails to retouch his base after a fair or foul ball is legally caught before he, or his base, is tagged by a fielder. He shall not be called out for failure to retouch his base after the first following pitch, or any play or attempted play. This is an appeal play;

Runners need not "tag up" on a foul tip. They may steal on a foul tip. If a so-called tip is not caught, it becomes an ordinary foul. Runners then return to their bases.

(e) He or the next base is tagged before he touches the next base, after he has been forced to advance by reason of the batter becoming a runner. However, if a following runner is put out on a force play, the force is removed and the runner must be tagged to be put out. The force is removed as soon as the runner touches the base to which he is forced to advance, and if he overslides or overruns the base, the runner must be tagged to be put out. However, if the forced runner, after touching the next base, retreats for any reason towards the base he had last occupied, the force play is reinstated, and he can again be put out if the defense tags the base to which he is forced;

Rule 7.08(c) Comment: PLAY. Runner on first and three balls on batter: Runner steals on the next pitch, which is fourth ball, but after having touched second he overslides or overruns that base. Catcher's throw catches him before he can return. Ruling is that runner is out. (Force out is removed.)

Oversliding and overrunning situations arise at bases other than first base. For instance, before two are out, and runners on first and second, or first, second and third, the ball is hit to an infielder who tries for the double play. The runner on first beats the throw to second base but overslides the base. The relay is made to first base and the batter-runner is out. The first baseman, seeing the runner at second base off the bag, makes the return throw to second and the runner is tagged off the base. Meanwhile runners have crossed the plate. The question is: Is this a force play? Was the force removed when the batter-runner was out at first base? Do the runs that crossed the plate during this play and before the third out was made when the runner was tagged at second, count? Answer: The runs score. It is not a force play. It is a tag play.

(f) He is touched by a fair ball in fair territory before the ball has touched or passed an infielder. The ball is dead and no runner may score, nor runners advance, except runners forced to advance. EXCEPTION: If a runner is touching his base when touched by an Infield Fly, he is not out, although the batter is out;

If two runners are touched by the same fair ball, only the first one is out because the ball is instantly dead.

If runner is touched by an Infield Fly when he is not touching his base, both runner and batter are out.

(g) He attempts to score on a play in which the batter interferes with the play at home base before two are out. With two out, the interference puts the batter out and no score counts;

(h) He passes a preceding runner before such runner is out;

(i) After he has acquired legal possession of a base, he runs the bases in reverse order for the purpose of confusing the defense or making a travesty of the game. The umpire shall immediately call "Time" and declare the runner out.

If a runner touches an unoccupied base and then thinks the ball was caught or is decoyed into returning to the base he last touched, he may be put out running back to that base, but if he reaches the previously occupied base safely he cannot be put out while in contact with that base.

(j) He fails to return at once to first base after overrunning or oversliding that base. If he attempts to run to second he is out when tagged. If, after overrunning or oversliding first base he starts toward the dugout, or toward his position, and fails to return to first base at once, he is out, on appeal, when he or the base is tagged;

Runner who touches first base in overrunning and is declared safe by the umpire has, within the intent of Rule 4.09(a) "reached first base" and any run which scores on such a play counts, even though the runner subsequently becomes the third out for failure to return "at once," as covered in Rule 7.08(j).

(k) In running or sliding for home base, he fails to touch home base and makes no attempt to return to the base, when a fielder holds the ball in his hand, while touching home base, and appeals to the umpire for the decision.

This rule applies only where runner is on his way to the bench and the catcher would be required to chase him. It does not apply to the ordinary play where the runner misses the plate and then immediately makes an effort to touch the plate before being tagged. In that case, runner must be tagged.

7.09 It is interference by a batter or a runner when —

(a) After a third strike he clearly hinders the catcher in his attempt to field the ball. Such batter-runner is out, the ball is dead, and all other runners return to the bases they occupied at the time of the pitch.

Rule 7.09(a) Comment: If the pitched ball deflects off the catcher or umpire and subsequently touches the batter-runner, it is not considered interference unless, in the judgment of the umpire, the batter-runner clearly hinders the catcher in his attempt to field the ball.

(b) He intentionally deflects the course of a foul ball in any manner;

(c) Before two are out and a runner on third base, the batter hinders a fielder in making a play at home base; the runner is out;

(d) Any member or members of the offensive team stand or gather around any base to which a runner is advancing, to confuse, hinder or add to the difficulty of the fielders. Such runner shall be declared out for the interference of his teammate or teammates;

(e) Any batter or runner who has just been put out hinders or impedes any following play being made on a runner. Such runner shall be declared out for the interference of his teammate;

If the batter or a runner continues to advance after he has been put out, he shall not by that act alone be considered as confusing, hindering or impeding the fielders.

(f) If, in the judgment of the umpire, a base runner willfully and deliberately interferes with a batted ball or a fielder in the act of fielding a batted ball with the obvious intent to break up a double play, the ball is dead. The umpire shall call the runner out for interference and also call out the batter-runner because of the action of his teammate. In no event may bases be run or runs scored because of such action by a runner.

(g) If, in the judgment of the umpire, a batter-runner willfully and deliberately interferes with a batted ball or a fielder in the act of fielding a batted ball, with the obvious intent to break up a double play, the ball is dead; the umpire shall call the batter- runner out for interference and shall also call out the runner who had advanced closest to home plate regardless where the double play might have been possible. In no event shall bases be run because of such interference.

(h) In the judgment of the umpire, the base coach at third base, or first base, by touching or holding the runner, physically assists him in returning to or leaving third base or first base.

(i) With a runner on third base, the base coach leaves his box and acts in any manner to draw a throw by a fielder;

(j) In running the last half of the distance from home base to first base while the ball is being fielded to first base, he runs outside (to the right of) the three-foot line, or inside (to the left of) the foul line and, in the umpire's judgment, interferes with the fielder taking the throw at first base, or attempting to field a batted ball;

The lines marking the three foot lane are a part of that "lane" but the interpretation to be made is that a runner is required to have both feet within the three foot "lane" or on the lines marking the "lane."

(k) He fails to avoid a fielder who is attempting to field a batted ball, or intentionally interferes with a thrown ball, provided that if two or more fielders attempt to field a batted ball, and the runner comes in contact with one or more of them, the umpire shall determine which fielder is entitled to the benefit of this rule, and shall not declare the runner out for coming in contact with a fielder other than the one the umpire determines to be entitled to field such a ball;

When a catcher and batter-runner going to first base have contact when the catcher is fielding the ball, there is generally no violation and nothing should be called. "Obstruction" by a fielder attempting to field a ball should be called only in very flagrant and violent cases because the rules give him the right of way, but of course such "right of way" is not a license to, for example, intentionally trip a runner even though fielding the ball. If the catcher is fielding the ball and the first baseman or pitcher obstructs a runner going to first base "obstruction" shall be called and the base runner awarded first base.

(l) A fair ball touches him on fair territory before touching a fielder. If a fair ball goes through, or by, an infielder, and touches a runner immediately back of him, or touches the runner after having been deflected by a fielder, the umpire shall not declare the runner out for being touched by a batted ball. In making such decision the umpire

must be convinced that the ball passed through, or by the fielder, and that no other infielder had the chance to make a play on the ball. If, in the judgment of the umpire, the runner deliberately and intentionally kicks such a batted ball on which the infielder has missed a play, then the runner shall be called out for interference.

PENALTY FOR INTERFERENCE: The runner is out and the ball is dead.

7.10 Any runner shall be called out, on appeal when —

(a) After a fly ball is caught, he fails to retouch his original base before he or his original base is tagged;

"Retouch," in this rule, means to tag up and start from a contact with the base after the ball is caught. A runner is not permitted to take a flying start from a position in back of his base.

(b) With the ball in play, while advancing or returning to a base, he fails to touch each base in order before he, or a missed base, is tagged.

APPROVED RULING: (1) No runner may return to touch a missed base after a following runner has scored. (2) When the ball is dead, no runner may return to touch a missed base or one he has left after he has advanced to and touched a base beyond the missed base.

PLAY. (a) Batter hits ball out of park or ground rule double and misses first base (ball is dead) — he may return to first base to correct his mistake before he touches second but if he touches second he may not return to first and if defensive team appeals he is declared out at first.

PLAY. (b) Batter hits ball to shortstop who throws wild into stand (ball is dead) — batter-runner misses first base but is awarded second base on the overthrow. Even though the umpire has awarded the runner second base on the overthrow, the runner must touch first base before he proceeds to second base.

These are appeal plays.

(c) He overruns or overslides first base and fails to return to the base immediately, and he or the base is tagged;

(d) He fails to touch home base and makes no attempt to return to that base, and home base is tagged.

Any appeal under this rule must be made before the next pitch, or any play or attempted play. If the violation occurs during a play which ends a half-inning, the appeal must be made before the defensive team leaves the field.

An appeal is not to be interpreted as a play or an attempted play.

Successive appeals may not be made on a runner at the same base. If the defensive team on its first appeal errs, a request for a second appeal on the same runner at the same base shall not be allowed by the umpire. (Intended meaning of the word "err" is that the defensive team in making an appeal threw the ball out of play. For example, if the pitcher threw to first base to appeal and threw the ball into the stands, no second appeal would be allowed.)

Appeal plays may require an umpire to recognize an apparent "fourth out." If the third out is made during a play in which an appeal play is sustained or another runner, the appeal play decision takes precedence in determining the out. If there is more than one appeal during a play that ends a half-inning, the defense may elect to take the out that gives it the advantage. For the purpose of this rule, the defensive team has "left the field" when the pitcher and all infielders have left fair territory on their way to the bench or clubhouse.

If two runners arrive at home base about the same time and the first runner misses home plate but a second runner legally touches the plate, the runner is tagged out on his attempt to come back and touch the base or is called out, on appeal, then he shall be considered as having been put out before the second runner scored and being the third out. Second runner's run shall not count, as provided in Rule 7.12.

If a pitcher balks when making an appeal, such act shall be a play. An appeal should be clearly intended as an appeal, either by a verbal request by the player or an act that unmistakably indicates an appeal to the umpire. A player, inadvertently stepping on the base with a ball in his hand, would not constitute an appeal. Time is not out when an appeal is being made.

7.11 The players, coaches or any member of an offensive team shall vacate any space (including both dugouts) needed by a fielder who is attempting to field a batted or thrown ball. PENALTY: Interference shall be called and the batter or runner on whom the play is being made shall be declared out.

7.12 Unless two are out, the status of a following runner is not affected by a preceding runner's failure to touch or retouch a base. If, upon appeal, the preceding runner is the third out, no runners following him shall score. If such third out is the result of a force play, neither preceding nor following runners shall score.

8.00 — The Pitcher.

8.01 Legal pitching delivery. There are two legal pitching positions, the Windup Position and the Set Position, and either position may be used at any time.

Pitchers shall take signs from the catcher while standing on the rubber.

Pitchers may disengage the rubber after taking their signs but may not step quickly onto the rubber and pitch. This may be judged a quick pitch by the umpire. When the pitcher disengages the rubber, he must drop his hands to his sides.

Pitchers will not be allowed to disengage the rubber after taking each sign.

(a) The Windup Position. The pitcher shall stand facing the batter, his pivot foot in contact with the pitcher's plate and the other foot free. From this position any natural movement associated with his delivery of the ball to the batter commits him to the pitch without interruption or alteration. He shall not raise either foot from the ground, except that in his actual delivery of the ball to the batter, he may take one step backward, and one step forward with his free foot. When a pitcher holds the ball with both hands in front of his body, with his pivot foot in contact with the pitcher's plate and his other foot free, he will be considered in the Windup Position.

Rule 8.01(a) Comment: In a Windup Position, a pitcher is permitted to have his "free" foot on the rubber, in front of the rubber, behind the rubber or off the side of the rubber.

From the Windup Position, the pitcher may:

(1) deliver the ball to the batter, or

(2) step and throw to a base in an attempt to pick-off a runner, or

(3) disengage the rubber. (If he does he must drop his hands to his sides).

In disengaging the rubber the pitcher must step off with his pivot foot and not his free foot first. He may not go into a set or stretch position — if he does it is a balk.

(b) The Set Position. Set Position shall be indicated by the pitcher when he stands facing the batter with his pivot foot in contact with, and his other foot in front of, the pitcher's

plate, holding the ball in both hands in front of his body and coming to a complete stop. From such Set Position he may deliver the ball to the batter, throw to a base or step backward off the pitcher's plate with his pivot foot. Before assuming Set Position, the pitcher may elect to make any natural preliminary motion such as that known as "the stretch." But if he so elects, he shall come to Set Position, before delivering the ball to the batter. After assuming Set Poisition, any natural motion associated with his delivery of the ball to the batter commits him to the pitch without alteration or interruption.

Preparatory to coming to a set position, the pitcher shall have one hand on his side; from this position he shall go to his set position as defined in Rule 8.01(b) without interruption and in one continuous motion.

The pitcher, following his stretch, must (a) hold the ball in both hands in front of his body and (b) come to a complete stop. This must be enforced. Umpires should watch this closely. Pitchers are constantly attempting to "beat the rule" in their efforts to hold runners on bases and in cases where the pitcher fails to make a complete "stop" called for in the rules, the umpire should immediately call a "Balk."

Rule 8.01(a) Comment: With no runners on base, the pitcher is not required to come to a complete stop when using the Set Position. If, however, in the umpire's judgment, a pitcher delivers the ball in a deliberate effort to catch the batter off guard, this delivery shall be deemed a quick pitch, for which the penalty is a ball. See Rule 8.05(e) Comment.

(c) At any time during the pitcher's preliminary movements and until his natural pitching motion commits him to the pitch, he may throw to any base provided he steps directly toward such base before making the throw.

The pitcher shall step "ahead of the throw." A snap throw followed by the step directly toward the base is a balk.

(d) If the pitcher makes an illegal pitch with the bases unoccupied, it shall be called a ball unless the batter reaches first base on a hit, an error, a base on balls, a hit batter or otherwise.

A ball which slips out of a pitcher's hand and crosses the foul line shall be called a ball; otherwise it will be called no pitch. This would be a balk with men on base.

(e) If the pitcher removes his pivot foot from contact with the pitcher's plate by stepping backward with that foot, he thereby becomes an infielder and if he makes a wild throw from that position, it shall be considered the same as a wild throw by any other infielder.

The pitcher, while off the rubber, may throw to any base. If he makes a wild throw, such throw is the throw of an infielder and what follows is governed by the rules covering a ball thrown by a fielder.

8.02 The pitcher shall not —

(a) (1) While in the 18-foot circle surrounding the pitcher's plate, touch the ball after touching his mouth or lips, or touch his mouth or lips while he is in contact with the pitcher's plate. The pitcher must clearly wipe the fingers of his pitching hand dry before touching the ball or the pitcher's plate. EXCEPTION: Provided it is agreed to by both managers, the umpire prior to the start of a game played in cold weather, may permit the pitcher to blow on his hand.

PENALTY: For violation of this part of this rule, the umpires shall immediately remove the ball from play and issue a warning to the pitcher. Any subsequent violation shall be called a ball. However, if the pitch is made and a batter reaches first base on a hit, an error, a hit batsman or otherwise, and no other runner is put out before advancing at least one base, the play shall proceed without reference to the violation.

(2) Expectorate on the ball, either hand or his glove;
(3) Rub the ball on his glove, person or clothing;
(4) Apply a foreign substance of any kind to the ball;
(5) Deface the ball in any manner; or
(6) Deliver a ball altered in a manner prescribed by Rule 8.02(a)(2) through (5) or what is called the "shine" ball, "spit" ball, "mud" ball or "emery" ball. The pitcher is allowed to rub the ball between his bare hands.

PENALTY: For violation of any part of this Rule 8.02(a)(2) through (6):

(a) the pitcher shall be ejected immediately from the game and shall be suspended automatically. In National Association Leagues, the automatic suspension shall be for 10 games.
(b) If a play follows the violation called by the umpire, the manager of the team at bat may advise the plate umpire-in-chief that he elects to accept the play. Such election shall be made immediately at the end of the play. However, if the batter reaches first base on a hit, an error, a base on balls, a hit batsman, or otherwise, and no other runner is put out before advancing at least one base, the play shall proceed without reference to the violation.
(c) Even though the team at bat elects to take the play, the violation shall be recognized and the penalties in subsection (a) will still be in effect.
(d) If the manager of the team at bat does not elect to accept the play, the umpire-in-chief shall call an automatic ball and, if there are any runners on base, a balk.
(e) The umpire shall be sole judge on whether any portion of this rule has been violated.

Rules 8.02(a)(2) through 8.02(a)(6) Comment: If a pitcher violates either Rule 8.02(a)(2) or 8.02(a)(3) and, in the judgment of the umpire, the pitcher did not intend, by his act, to alter the characteristics of a pitched ball, then the umpire may, in his discretion, warn the pitcher in lieu of applying the penalty set forth for violations of 8.02(a)(2) through 8.02(a)(6). If the pitcher persists in violating either of those Rules, however, the umpire should then apply the penalty.

(b) Have on his person, or in his possession, any foreign substance. For such infraction of this section (b) the penalty shall be immediate ejection from the game.
(c) Intentionally delay the game by throwing the ball to players other than the catcher, when the batter is in position, except in an attempt to retire a runner.

PENALTY: If, after warning by the umpire, such delaying action is repeated, the pitcher shall be removed from the game.

(d) Intentionally Pitch at the Batter.

If, in the umpire's judgment, such a violation occurs, the umpire may elect either to:

1. Expel the pitcher, or the manager and the pitcher, from the game, or
2. May warn the pitcher and the manager of both teams that another such pitch will result in the immediate expulsion of that pitcher (or a replacement) and the manager.

If, in the umpire's judgment, circumstances warrant, both teams may be officially "warned" prior to the game or at any time during the game.

(League Presidents may take additional action under authority provided in Rule 9.05.)

To pitch at a batter's head is unsportsmanlike and highly dangerous. It should be — and is — condemned by everybody. Umpires should act without hesitation in enforcement of this rule.

8.03 When a pitcher takes his position at the beginning of each inning, or when he relieves another pitcher, he shall be permitted to pitch not to exceed eight preparatory pitches to his catcher during which play shall be suspended. A league by its own action may limit the number of preparatory pitches to less than eight preparatory pitches. Such preparatory pitches shall not consume more than one minute of time. If a sudden emergency causes a pitcher to be summoned into the game without any opportunity to warm-up, the umpire-in-chief shall allow him as many pitches as the umpire deems necessary.

8.04 When the bases are unoccupied, the pitcher shall deliver the ball to the batter within 12 seconds after he receives the ball. Each time the pitcher delays the game by violating this rule, the umpire shall call "Ball."

The 12-second timing starts when the pitcher is in possession of the ball and the batter is in the box, alert to the pitcher. The timing stops when the pitcher releases the ball.

The intent of this rule is to avoid unnecessary delays. The umpire shall insist that the catcher return the ball promptly to the pitcher, and that the pitcher take his position on the rubber promptly. Obvious delay by the pitcher should instantly be penalized by the umpire.

8.05 If there is a runner, or runners, it is a balk when —

(a) The pitcher, while touching his plate, makes any motion naturally associated with his pitch and fails to make such delivery;

If a lefthanded or righthanded pitcher swings his free foot past the back edge of the pitcher's rubber, he is required to pitch to the batter except to throw to second base on a pick-off-play.

(b) The pitcher, while touching his plate, feints a throw to first or third base and fails to complete the throw;

(c) The pitcher, while touching his plate, fails to step directly toward a base before throwing to that base.

Rule 8.05(c) Comment: Requires the pitcher, while touching his plate, to step directly toward a base before throwing to that base. If a pitcher turns or spins off of his free foot without actually stepping or if he turns his body and throws before stepping, it is a balk.

A pitcher is to step directly toward a base before throwing to that base, and is required to throw (except to second base) because he steps. It is a balk if, with runners on first and third, the pitcher steps toward third and does not throw, merely to bluff the runner back to third; then seeing the runner on first start for second, turn and step toward and throw to first base. It is legal for a pitcher to feint a throw to second base.

(d) The pitcher, while touching his plate, throws, or feints a throw to an unoccupied base, except for the purpose of making a play;

(e) The pitcher makes an illegal pitch;

A quick pitch is an illegal pitch. Umpires will judge a quick pitch as one delivered before the batter is reasonably set in the batter's box, with runners on base the penalty is a balk; with no runners on base, it is a ball. The quick pitch is dangerous and should not be permitted.

(f) The pitcher delivers the ball to the batter while he is not facing the batter;
(g) The pitcher makes any motion naturally associated with his pitch while he is not touching the pitcher's plate;
(h) The pitcher unnecessarily delays the game;
(i) The pitcher, without having the ball, stands on or astride the pitcher's plate or while off the plate, he feints a pitch;
(j) The pitcher, after coming to a legal pitching position, removes one hand from the ball other than in an actual pitch, or in throwing to a base;
(k) The pitcher, while touching his plate, accidentally or intentionally has the ball, slip or fall out of his hand or glove;
(l) The pitcher, while giving an intentional base on balls, pitches when the catcher is not in the catcher's box;
(m) The pitcher delivers the pitch from Set Position without coming to a stop.

PENALTY: The ball is dead, and each runner shall advance one base without liability to be put out, unless the batter reaches first on a hit, an error, a base on balls, a hit batter, or otherwise, and all other runners advance at least one base, in which case the play proceeds without reference to the balk.

CAL RIPKEN MAJOR 60 FT. DIVISION — PENALTY – The ball is dead, the umpire shall warn the pitcher of the infraction and if the infraction is repeatedly violated, has the authority to remove the pitcher from the game as a pitcher only.

Cal Ripken Major 70 Ft. DIvision enforces the balk penalty.

APPROVED RULING: In cases where a pitcher balks and throws wild, either to a base or to home plate, a runner or runners may advance beyond the base to which he is entitled at his own risk.

APPROVED RULING: A runner who misses the first base to which he is advancing and who is called out on appeal shall be considered as having advanced one base for the purpose of this rule.

Umpires should bear in mind that the purpose of the balk rule is to prevent the pitcher from deliberately deceiving the base runner. If there is doubt in the umpire's mind, the "intent" of the pitcher should govern. However, certain specifics should be borne in mind:

(a) Straddling the pitcher's rubber without the ball is to be interpreted as intent to deceive and ruled a balk.
(b) With a runner on first base the pitcher may make a complete turn, without hesitating toward first and throw to second. This is not to be interpreted as throwing to an unoccupied base.

8.06 A professional league shall adopt the following rule pertaining to the visit of the manager or coach to the pitcher:

(a) This rule limits the number of trips a manager or coach may make to any one pitcher in any one inning;
(b) A second trip to the same pitcher in the same inning will cause this pitcher's automatic removal;
(c) The manager or coach is prohibited from making a second visit to the mound while the same batter is at bat, but;
(d) If a pinch-hitter is substituted for this batter, the manager or coach may make a second visit to the mound, but must remove the pitcher.

A manager or coach is considered to have concluded his visit to the mound when he leaves the 18-foot circle surrounding the pitcher's rubber.

TRIPS TO THE MOUND (All Divisions) — The second trip in the same inning to the same pitcher shall automatically result in the removal of that pitcher from the game AS A PITCHER ONLY.

If the manager or coach goes to the catcher or infielder and that player then goes to the mound or the pitcher comes to him at his position before there is an intervening play (a pitch or other play) that will be the same as the manager or coach going to the mound.

Any attempt to evade or circumvent this rule by the manager or coach going to the catcher or an infielder and then that player going to the mound to confer with the pitcher shall constitute a trip to the mound.

If the coach goes to the mound and removes a pitcher and then the manager goes to the mound to talk with the new pitcher, that will constitute one trip to that new pitcher that inning.

In a case where a manager has made his first trip to the mound and then returns the second time to the mound in the same inning with the same pitcher in the game and the same batter at bat, after being warned by the umpire that he cannot return to the mound, the manager shall be removed from the game and the pitcher required to pitch to the batter until he is retired or gets on base. After the batter is retired, or becomes a base runner, then this pitcher must be removed from the game. The manager should be notified that his pitcher will be removed from the game after he pitches to one hitter, so he can have a substitute pitcher warmed up.

The substitute pitcher will be allowed eight preparatory pitches or more if in the umpire's judgment circumstances justify.

9.00 — The Umpire.

9.01 (a) The league president shall appoint one or more umpires to officiate at each league championship game. The umpires shall be responsible for the conduct of the game in accordance with these official rules and for maintaining discipline and order on the playing field during the game.

(b) Each umpire is the representative of the league and of professional baseball, and is authorized and required to enforce all of these rules. Each umpire has authority to order a player, coach, manager or club officer or employee to do or refrain from doing anything which affects the administering of these rules and to enforce the prescribed penalties.

(c) Each umpire has authority to rule on any point not specifically covered in these rules.

(d) Each umpire has authority to disqualify any player, coach, manager or substitute for objecting to decisions or for unsportsmanlike conduct or language, and to eject such disqualified person from the playing field. If an umpire disqualifies a player while a play is in progress the disqualification shall not take effect until no further action is possible in that play.

(e) Each umpire has authority at his discretion to eject from the playing field (1) any person whose duties permit his presence on the field, such as ground crew members, ushers, photographers, newsmen, broadcasting crew members, etc., and (2) any spectator or other person not authorized to be on the playing field.

9.02 (a) Any umpire's decision which involves judgment, such as, but not limited to, whether a batted ball is fair or foul, whether a pitch is a strike or a ball, or whether a runner is safe or out, is final. No player, manager, coach or substitute shall object to any such judgment decision.

Rule 9.02(a) Comment: Players leaving their position in the field or on base, or managers or coaches leaving the bench or coaches box, to argue on BALLS AND STRIKES will not be permitted. They should be warned if they start for the plate to protest the call. If they continue, they will be ejected from the game.

(b) If there is reasonable doubt that any umpire's decision may be in conflict with the rules, the manager may appeal the decision and ask that a correct ruling be made. Such appeal shall be made only to the umpire who made the protested decision.

(c) If a decision is appealed, the umpire making the decision may ask another umpire for information before making a final decision. No umpire shall criticize, seek to reverse or interfere with another umpire's decision unless asked to do so by the umpire making it. If the umpires consult after a play and change a call that had been made, then they have the authority to take all steps that they may deem necessary, in their decision, to eliminate the results and consequences of the earlier call that they are reversing, including placing runners where they think those runners would have been after the play, had the ultimate call been made as the initial call, disregarding interference or obstruction that may have occurred on the play; failures of runners to tag up based upon the initial call on the field; runners passing other runners or missing bases; etc., all in the discretion of the umpires. No player, manager or coach shall be permitted to argue the exercise of the umpire's discretion in resolving the play and any person so arguing shall be subject to ejection.

Rule 9.02(c) Comment: A manager is permitted to ask the umpires for an explanation of the play and how the umpires have exercised their discretion to eliminate the results and consequences

of the earlier call that the umpires are reversing. Once the umpires explain the result of the play, however, no one is permitted to argue that the umpires should have exercised their discretion in a difference manner.

The manager or the catcher may request the plate umpire to ask his partner for help on a half swing when the plate umpire calls the pitch a ball, but not when the pitch is called a strike. The manager may not complain that the umpire made an improper call, but only that he did not ask his partner for help. Field umpires must be alerted to the request from the plate umpire and quickly respond. Managers may not protest the call of a ball or strike on the pretense they are asking for information about a half swing.

Appeals on a half swing may be made only on the call of ball and when asked to appeal, the home plate umpire must refer to a base umpire for his judgment on the half swing. Should the base umpire call the pitch a strike, the strike call shall prevail.

Baserunners must be alert to the possibility that the base umpire on appeal from the plate umpire may reverse the call of a ball to the call of a strike, in which event the runner is in jeopardy of being out by the catcher's throw. Also, a catcher must be alert in a base stealing situation if a ball call is reversed to a strike by the base umpire upon appeal from the plate umpire.

The ball is in play on appeal on a half swing.

On a half swing, if the manager comes out to argue with first or third base umpire and if after being warned he persists in arguing, he can be ejected as he is now arguing over a called ball or strike.

(d) No umpire may be replaced during a game unless he is injured or becomes ill.

9.03 (a) If there is only one umpire, he shall have complete jurisdiction in administering the rules. He may take any position on the playing field which will enable him to discharge his duties (usually) behind the catcher, but sometimes behind the pitcher if there are runners.

(b) If there are two or more umpires, one shall be designated umpire-in-chief and the others field umpires.

9.04 (a) The umpire-in-chief shall stand behind the catcher. (He usually is called the plate umpire.) His duties shall be to:

(1) Take full charge of, and be responsible for, the proper conduct of the game;
(2) Call and count balls and strikes;
(3) Call and declare fair balls and fouls except those commonly called by field umpires;
(4) Make all decisions on the batter;
(5) Make all decisions except those commonly reserved for the field umpires;
(6) Decide when a game shall be forfeited;
(7) If a time limit has been set, announce the fact and the time set before the game starts;
(8) Inform the official scorer of the official batting order, and any changes in the lineups and batting order, on request;
(9) Announce any special ground rules, at his discretion.

(b) A field umpire may take any position on the playing field he thinks best suited to make impending decisions on the bases. His duties shall be to:

(1) Make all decisions on the bases except those specifically reserved to the umpire-in-chief;
(2) Take concurrent jurisdiction with the umpire-in-chief in calling "Time," balks, illegal pitches, or defacement or discoloration of the ball by any player.
(3) Aid the umpire-in-chief in every manner in enforcing the rules, and excepting the power to forfeit the game, shall have equal authority with the umpire-in-chief in in administering and enforcing the rules and maintaining discipline.

(c) If different decisions should be made on one play by different umpires, the umpire-in-chief shall call all the umpires into consultation, with no manager or player present. After consultation, the umpire-in-chief (unless another umpire may have been designated by the league president) shall determine which decision shall prevail, based on which umpire was in the best position and which decision was most likely correct. Play shall proceed as if only the final decision had been made.

9.05 (a) The umpire shall report to the league president within 12 hours after the end of a game all violations of rules and other incidents worthy of comment, including the disqualification of any trainer, manager, coach or player, and the reasons therefore.

(b) When any trainer, manager, coach or player is disqualified for a flagrant offense such as the use of obscene or indecent language, or an assault upon an umpire, trainer, manager, coach or player, the umpire shall forward full particulars to the league president within four hours after the end of the game.

(c) After receiving the umpire's report that a trainer, manager, coach or player has been disqualified, the league president shall impose such penalty as he deems justified, and shall notify the person penalized and the manager of the club of which the penalized person is a member. If the penalty includes a fine, the penalized person shall pay the amount of the fine to the league within five days after receiving notice of the fine. Failure to pay such fine within five days shall result in the offender being debarred from participation in any game and from sitting on the players' bench during any game, until the fine is paid.

GENERAL INSTRUCTIONS TO UMPIRE

Umpires, on the field, should not indulge in conversation with players. Keep out of the coaching box and do not talk to the coach on duty.

Keep your uniform in good condition. Be active and alert on the field.

Be courteous, always, to club officials; avoid visiting in club offices and thoughtless familiarity with officers or employees of contesting clubs. When you enter a ball park your sole duty is to umpire a ball game as the representative of baseball.

Do not allow criticism to keep you from studying out bad situations that may lead to protested games. Carry your rule book. It is better to consult the rules and hold up the game ten minutes to decide a knotty problem than to have a game thrown out on protest and replayed.

Keep the game moving. A ball game is often helped by energetic and earnest work of the umpires.

You are the only official representative of baseball on the ball field. It is often a trying position which requires the exercise of much patience and good judgment, but do not forget that the first essential in working out of a bad situation is to keep your own temper and self-control.

You no doubt are going to make mistakes, but never attempt to "even up" after having made one. Make all decisions as you see them and forget which is the home or visiting club.

Keep your eye everlastingly on the ball while it is in play. It is more vital to know just where a fly ball fell, or a thrown ball finished up, than whether or not a runner missed a base. Do not call the plays too quickly, or turn away too fast when a fielder is throwing to complete a double play. Watch out for dropped balls after you have called a man out.

Do not come running with your arm up or down, denoting "out" or "safe." Wait until the play is completed before making any arm motion.

Each umpire team should work out a simple set of signals, so the proper umpire can always right a manifestly wrong decision when convinced he has made an error. If sure you got the play correctly, do not be stampeded by players' appeals to "ask the other man." If not sure, ask one of your associates. Do not carry this to extremes, be alert and get your own plays. But remember! The first requisite is to get decisions correct. If in doubt don't hesitate to consult your associate. Umpire dignity is important but never as important as "being right."

A most important rule for umpires is always "BE IN POSITION TO SEE EVERY PLAY." Even though your decision may be 100 percent right, players still question it if they feel you were not in a spot to see the play clearly and definitely.

Finally, be courteous, impartial and firm, and so compel respect from all.

To learn more about the Babe Ruth League National Umpires Association, or to become a member, please visit www.baberuthleague.org

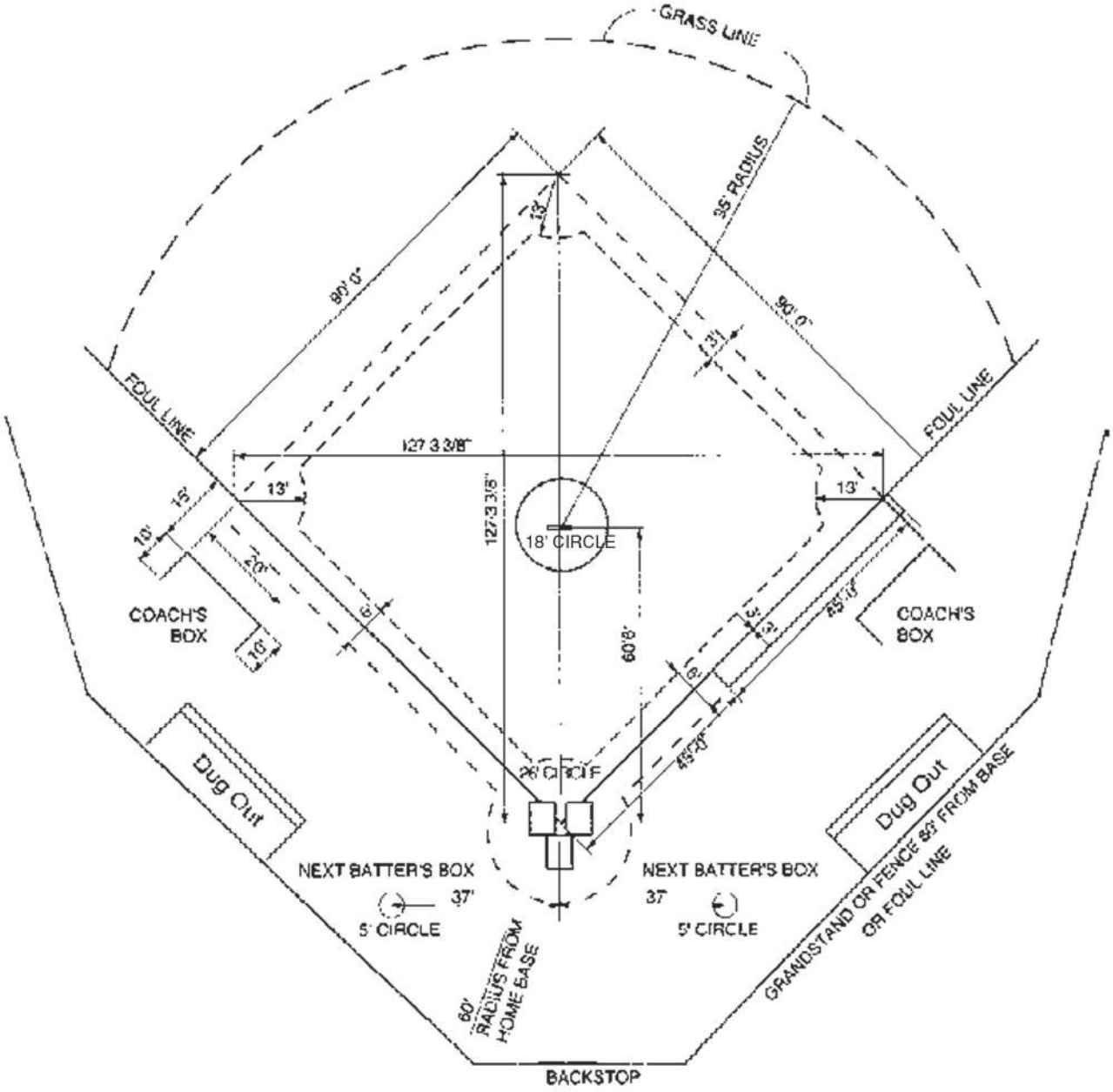

DIAGRAM NO. 1

LEGEND

- BATTER'S BOX, CATCHER'S BOX, FOUL LINE, PITCHER'S PLATE, COACH'S BOX
- NEXT BATTER'S BOX
- BASE LINES
- GRASS LINES

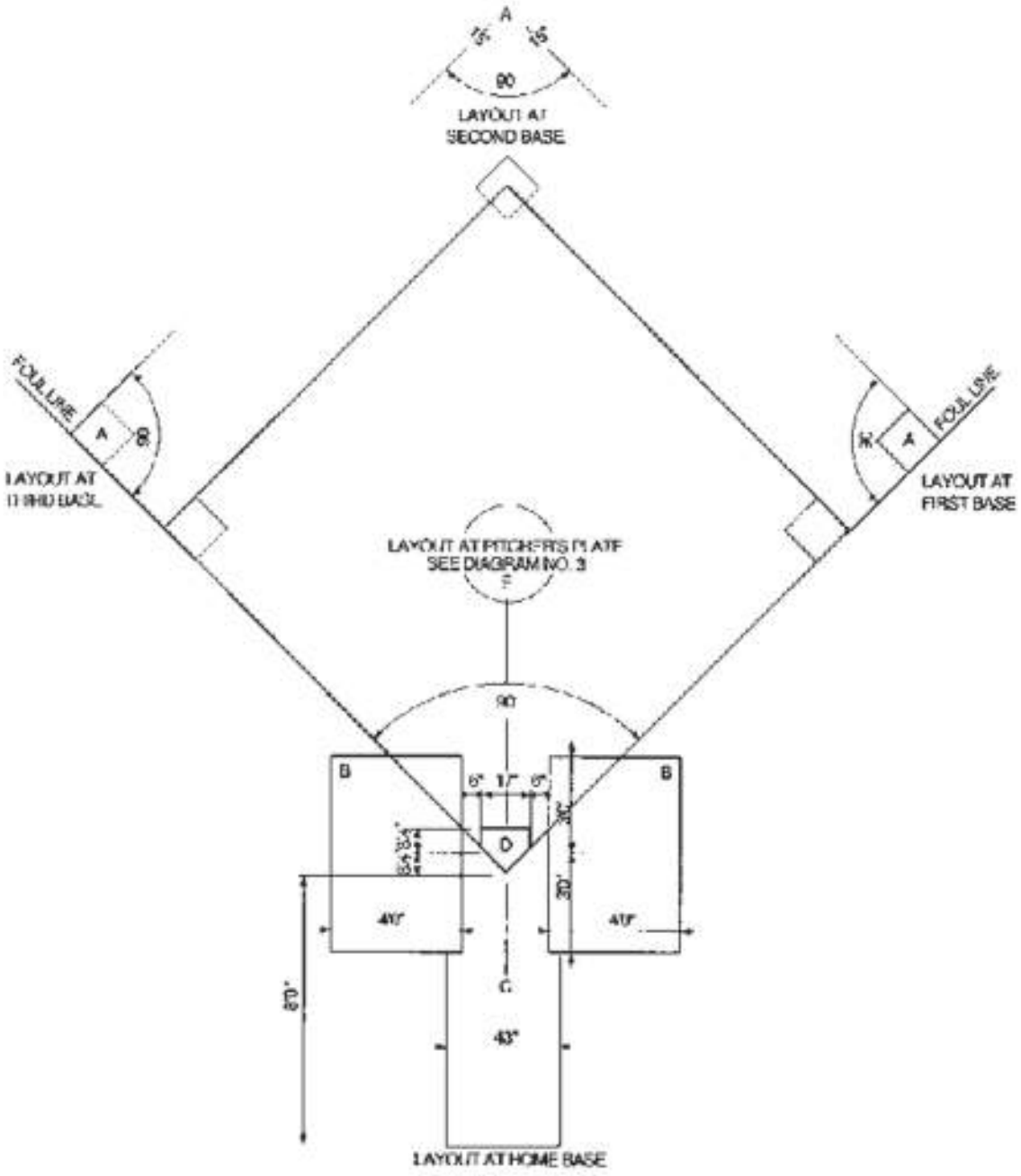

DIAGRAM NO. 2

LEGEND

A 1st, 2nd, 3rd BASES
B BATTER'S BOX
C CATCHER'S BOX
D HOME BASE
E PITCHER'S PLATE

BABE RUTH LEAGUE, INC.
13-15 & 16-18 DIVISIONS

Suggested Layout of Pitching Mound

This Diagram No. 3 supplements and, in cases of difference, supersedes Diagram No. 2.

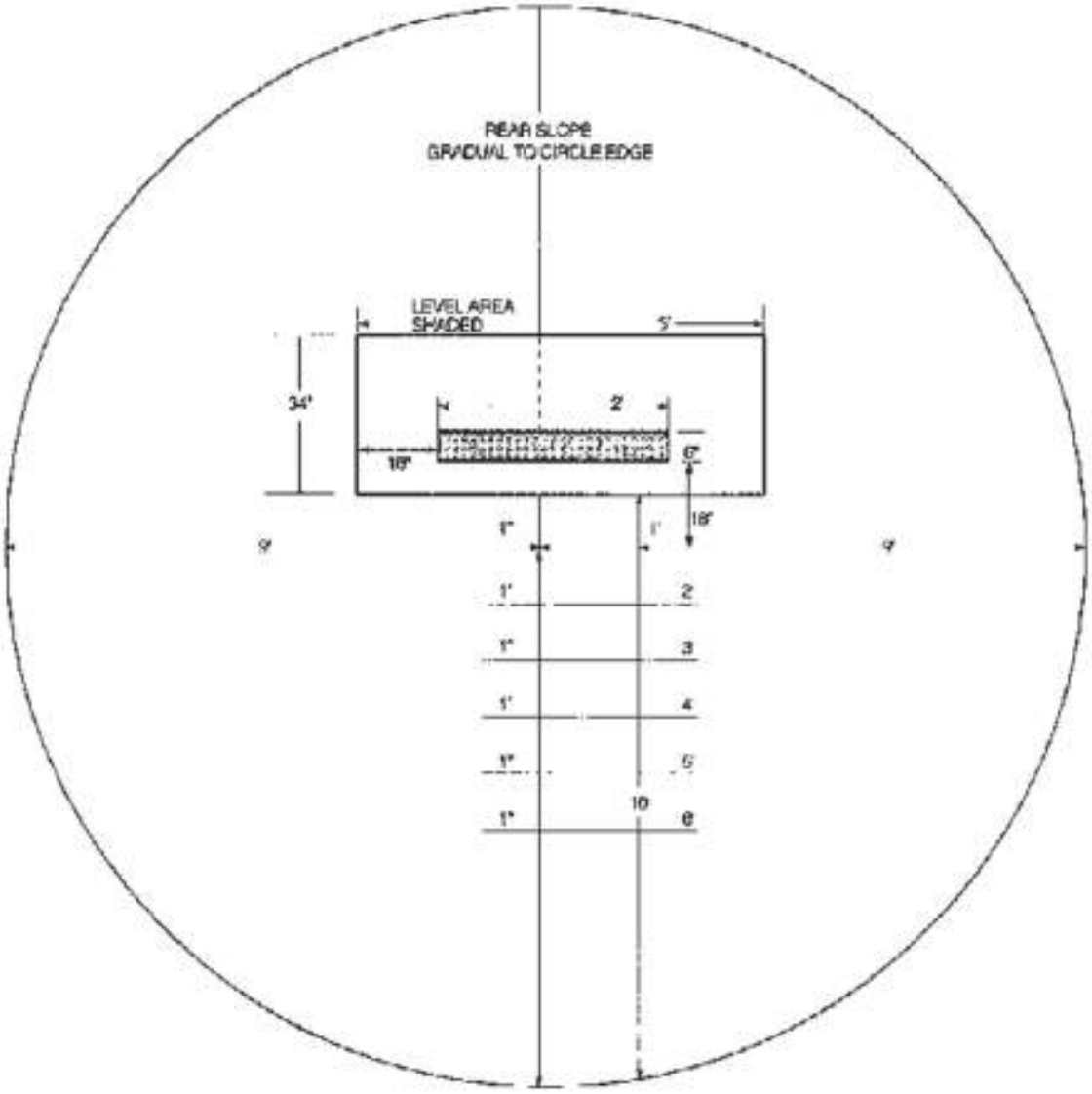

DIAGRAM NO. 3

Pitching Mound - An 18' diameter circle, center of which is 60' from back of home plate.

Locate front edge of rubber 18" behind center of mound.

Front edge of rubber to back point of home plate, 60'6".

Slope starts 6' from front edge of rubber.

The degree of slope from a starting point 6" in front of the pitcher's plate to a point 6' toward home plate shall be 1" to 1', and such degree of slope shall be uniform.

Level area surrounding rubber should be 6" in front of rubber, 18" to each side and 22" to rear of rubber. Total level area 5' x 34'.

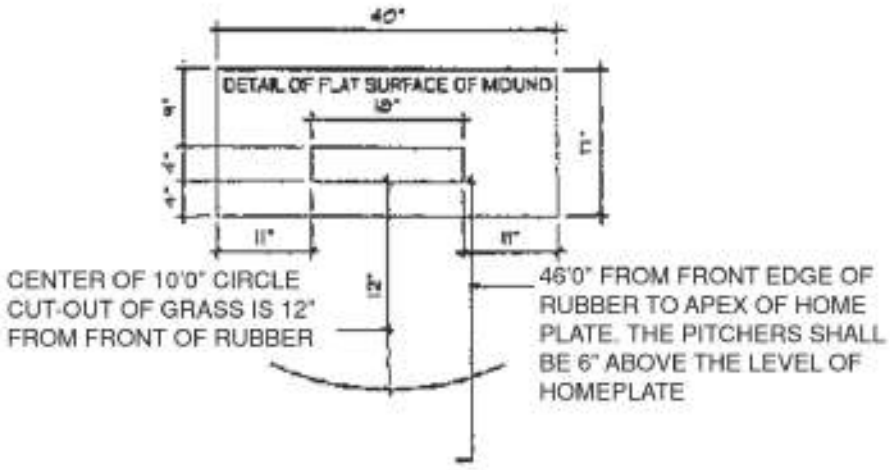

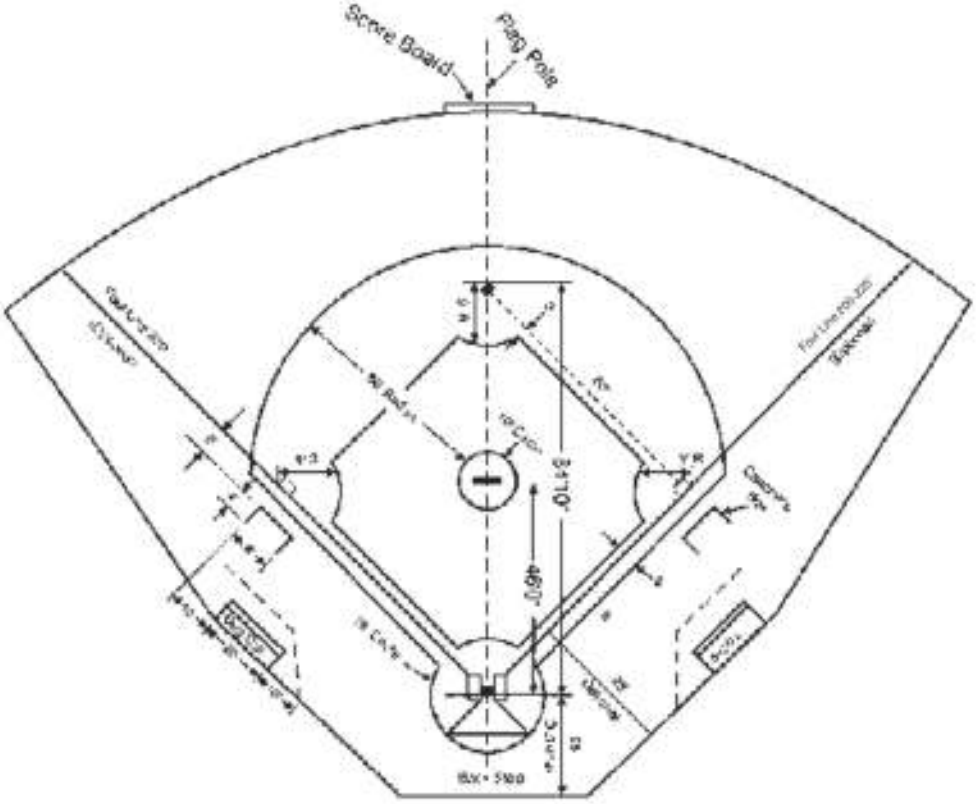

DIAGRAM NO. 4

CAL RIPKEN 60 FT DIVISION
FIELD LAYOUT

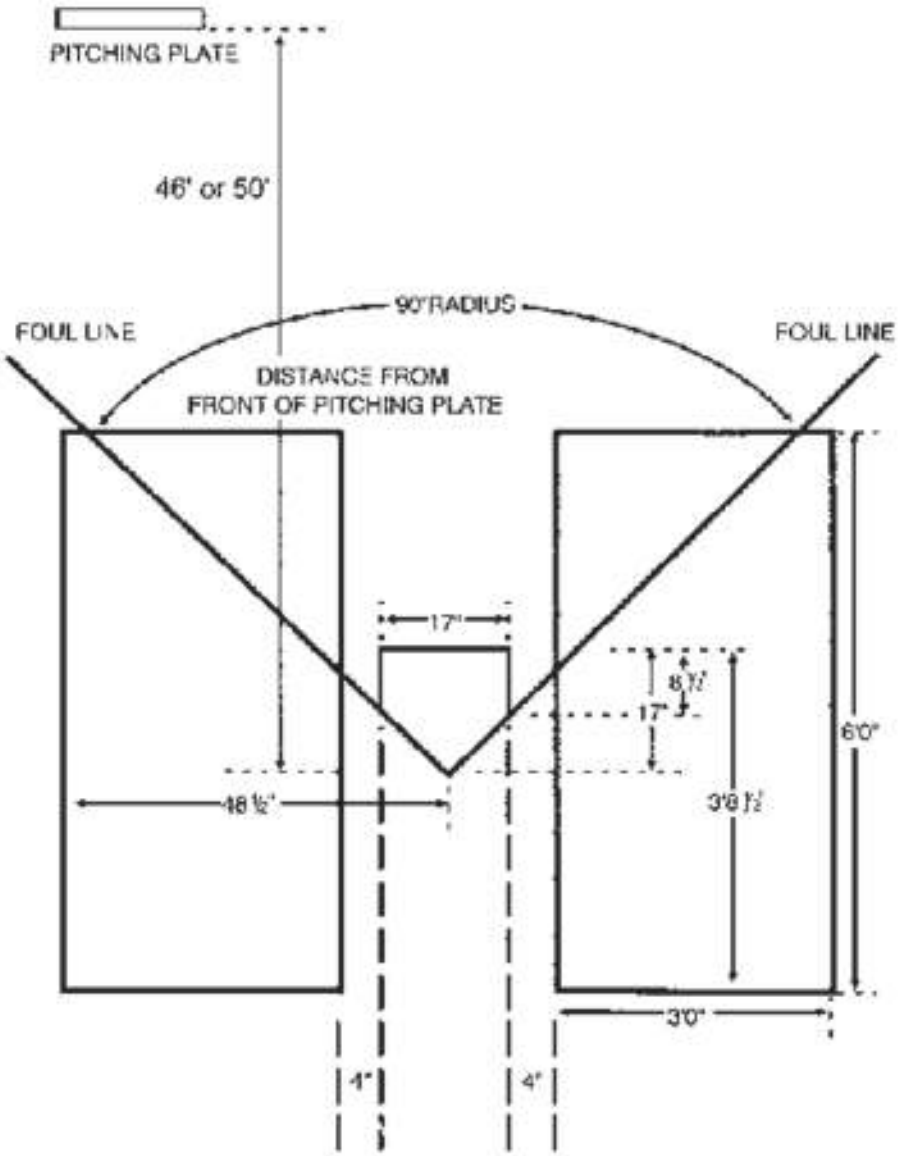

DIAGRAM NO. 5

CAL RIPKEN DIVISION
BATTER'S BOX

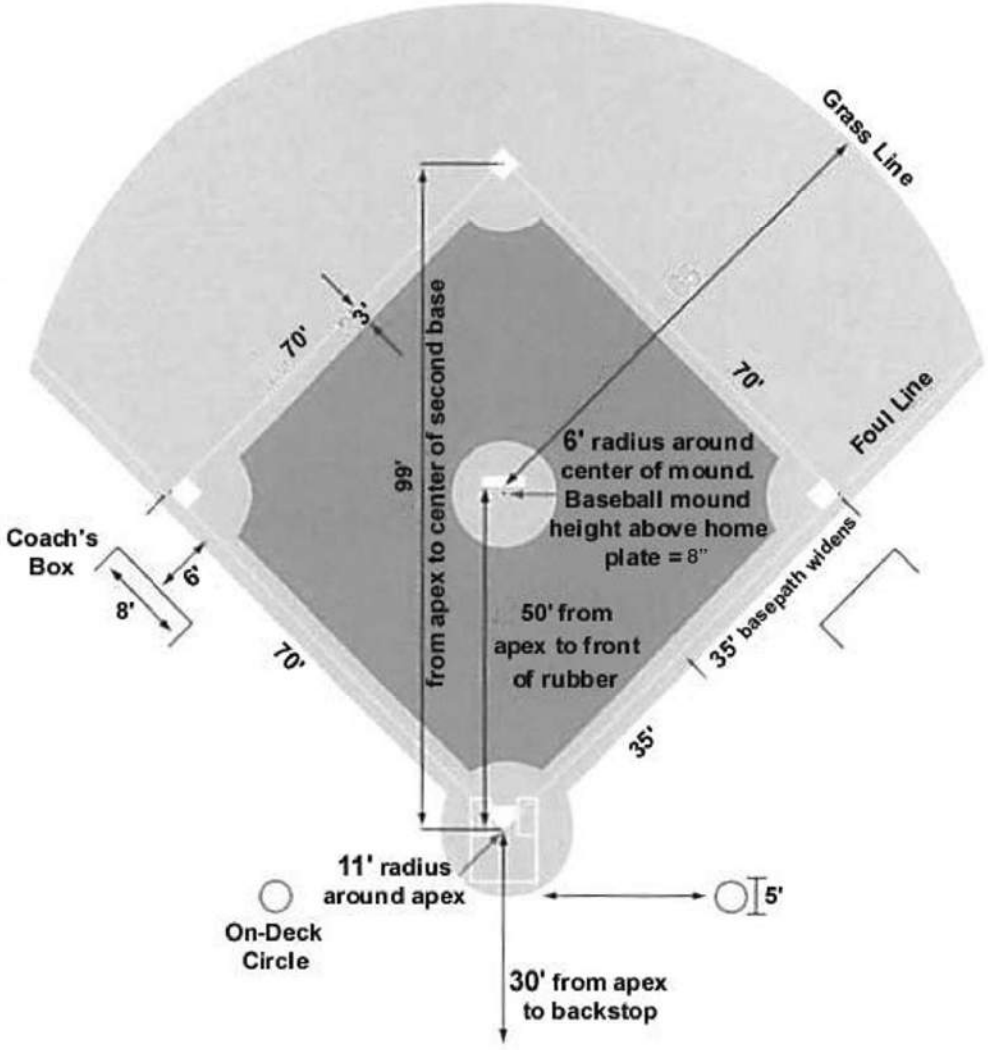

CAL RIPKEN MAJOR 70 FT

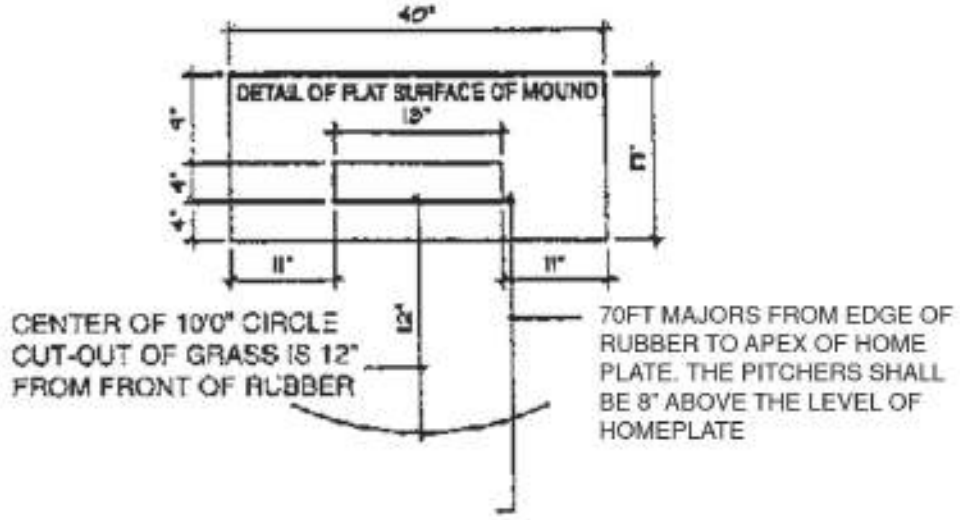
40"
DETAIL OF FLAT SURFACE OF MOUND
18"
4"
4"
4"
11"
11"
CENTER OF 10'0" CIRCLE
CUT-OUT OF GRASS IS 12"
FROM FRONT OF RUBBER
70FT MAJORS FROM EDGE OF
RUBBER TO APEX OF HOME
PLATE. THE PITCHERS SHALL
BE 8" ABOVE THE LEVEL OF
HOMEPLATE

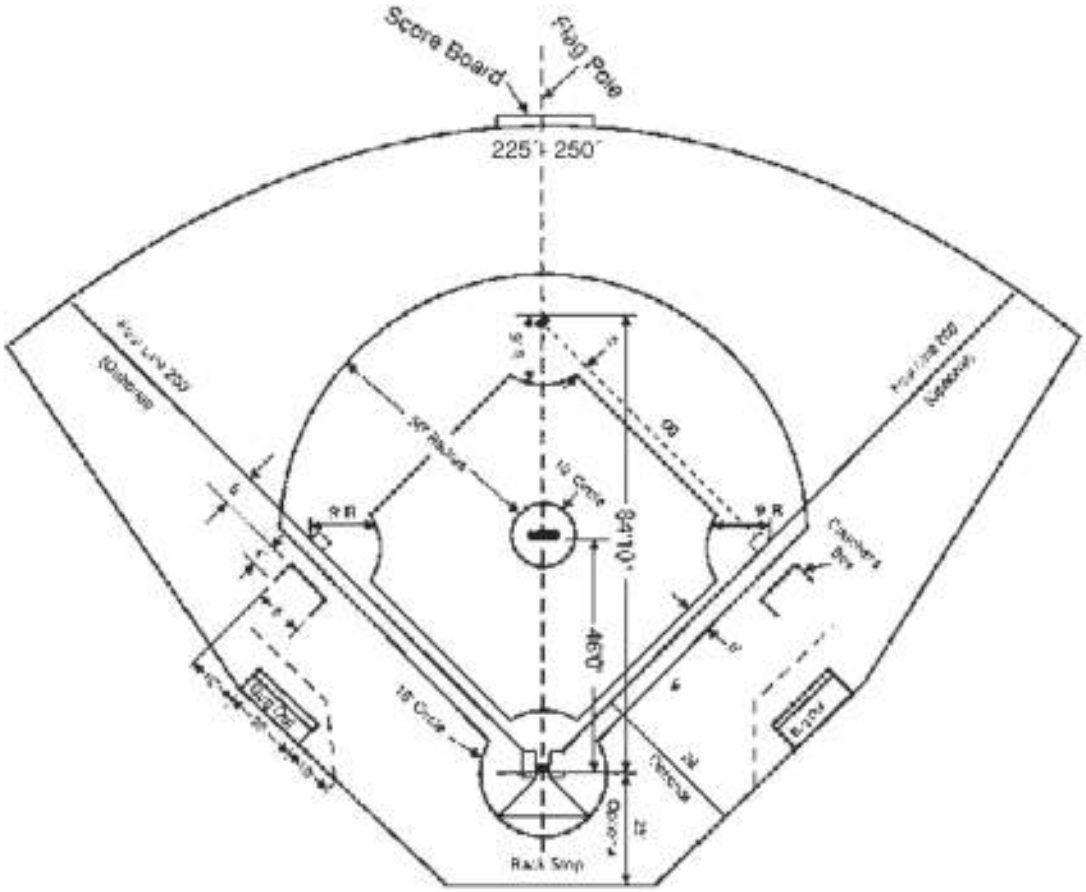
Score Board
Flag Pole
225'- 250'
84'10"
46'0"
Back Stop

Suggested Layout of Pitching Mound

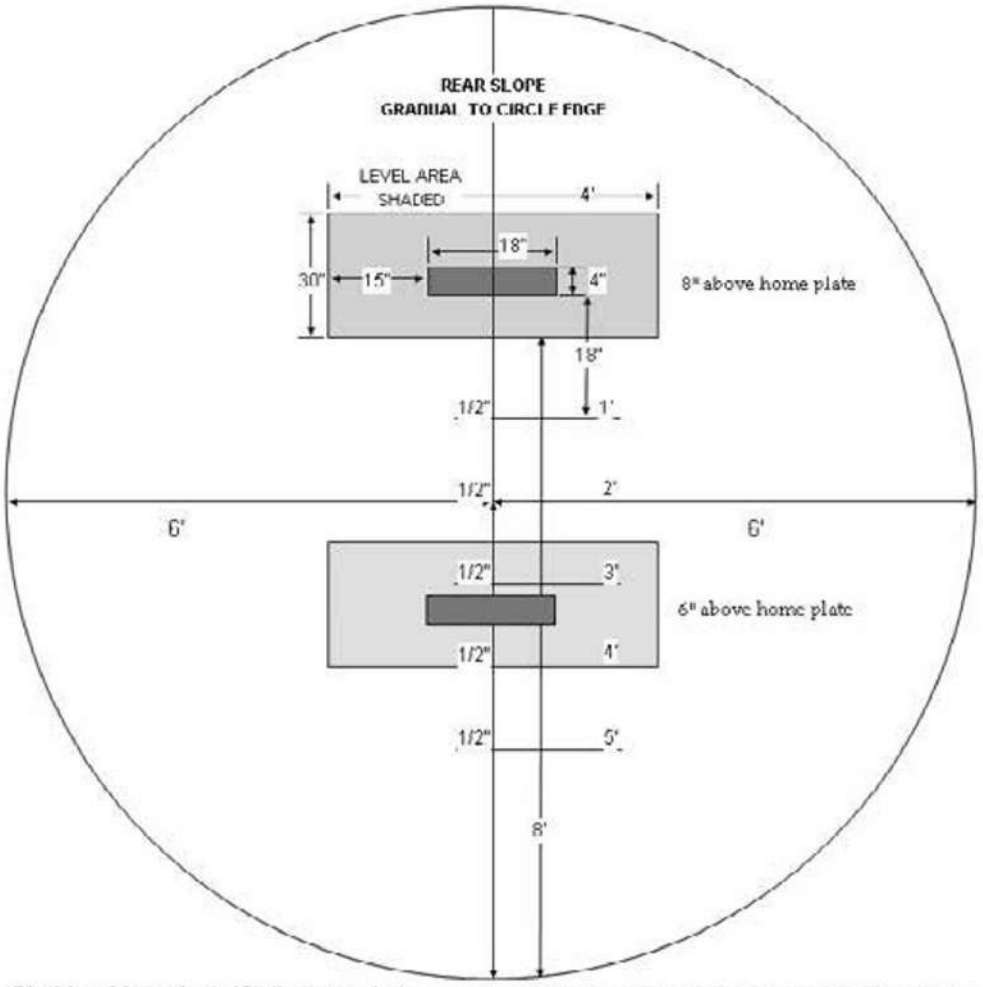

- **Pitching Mound** - A 12' diameter circle center of which is 48 1/2' from back of home plate.
- Locate front edge of rubber 18" behind center of mound.
- Front edge of rubber to back point of home plate, 46' or 50'.
- Slope starts 6" from edge of rubber.
- The degree of slope, from a starting point 6" in front of the 46' and 8" in front of the 50' pitcher's plate to a point 6' toward home plate, shall be 1/2" to 1", and such degree of slope shall be uniform.
- Level area surrounding rubber should be 6" in front of rubber, 10" to each side and 22" to rear of rubber. Total level area 4' x 30".

OFFICIAL MLB PLAYING RULES

INDEX

(Note: Where Rule 2.00 is indexed, the definition of the indexed item includes important explanatory matter.)

Accident to Player or Umpire — 5.10 (c) and (h).
Appeals — 6.07 (b), 7.10.
Balk — Ball Dead 5.09 (c), 8.05; Penalty 7.04 (a), 7.07, 8.05; Penalty waived 8.05.
Ball — Called Ball 2.00; Dead Ball 3.12, 5.02, 5.09, 5.10; Live Ball 5.02, 5.11; Official game Balls 3.01 (c).
Base Coaches — Number 4.05; Restrictions 3.17, 4.05 (b); Interference 5.09 (g), 7.09 (i - j); Accidental Interference 5.08.
Batter — Batter Becomes Runner 6.08, 6.09; Batter Interference 6.05 (h), 6.06 (c), 7.08 (g), 7.09; Batter Out 6.02 (c), 6.05, 6.06, 6.07, 7.09, 7.11 Penalty; Interference with Batter 6.08 (c), 7.04 (d).
Batter's Box — 2.00, 6.03, 6.06 (b).
Batting Order — 4.01, 4.04, 6.01, 6.04.
Batting Out of Order — 6.07.
Catcher — Interference by 6.08 (c), 7.04 (d), 7.07; Interference with 6.06 (c).
Catcher's Position — 4.03 (a).
Defacing, Discoloring Ball — 3.02, 8.02 (a).
Definition of Terms — alphabetically) Rule 2.00.
Deflected Batted Ball — 6.09 (g - h), 7.05 (a) and (f).
Delay of Game — By Batter 6.02 (c); by Pitcher 8.02 (c); 8.04; Forfeit for Delays 4.15.
Designated Hitter — 6.10.
Discipline of Team Personnel — 3.14, 4.06, 4.07, 4.08, 4.15, 9.01 (b) and (d), 9.05.
Doubleheaders — 4.13.
Equipment — Ball 1.09; Bases 1.06; Bats 1.10; Benches 1.08; Commercialization 1.17; Gloves 1.12, 1.13, 1.14, 1.15; Helmets 1.16; Home Base 1.05; Pitcher's Plate 1.07; Toe Plate 1.11 (g); Uniforms 1.11.
Equipment Thrown at Ball — 7.05 (a - e).
Fair Ball Bounces Out of Play — 6.09 (e - f - g), 7.05 (f).
Fielder Falls Into Dugout — 5.10 (f), 7.04 (c).
Fielder's Choice — 2.00.
Forfeits — 4.15, 4.16, 4.17, 4.18.
Ground Rules — 3.13, 9.04 (a) (9).
Illegal Pitch — 2.00, 8.01 (d), 8.02 (a) (6), 8.05 (e).
Illegally Batted Ball — 6.06 (a).
Infield Fly — 2.00, 6.05 (e) and (l), 7.08 (f).
Intentionally Dropped Ball — 6.05 (l).
Interference — Defensive 2.00, 6.08 (c), 7.04 (d), 7.07; Offensive 2.00, 5.09 (f) and (g), 6.05 (h) (i) (m) and (n), 6.06 (c), 6.08 (d), 7.08 (b) (f) and (g), 7.09, 7.11; Spectator 2.00, 3.16; Umpires 2.00, 5.09 (b) and (f); 6.08 (d).
Light Failure — 4.12 (a) and (b), 5.10 (b).
Missed Base — 7.02, 7.04—Note, 7.08 (k), 7.10 (b), 7.12, 8.05 Penalty—Approved Ruling.
Obstruction — 7.06.

Overrunning First Base — 7.08 (c) and (j), 7.10 (c).
Penalties — 2.00 (See LEAGUE PRESIDENT).
Pitcher — Legal Position 8.01 (a) and (b); Becomes Infielder 8.01 (e); Preparatory Pitches 8.03; Take Signs While on Rubber 8.01; Throwing at Batter 8.02 (d); Throwing to a Base 7.05 (h), 8.01 (c); Visits by Manager or Coach 8.06.
Players' Positions — 4.03.
Playing Field — 1.04.
(Includes Diagrams of Mound and Diamond Layout and Playing Lines.)
Police Protection — 3.18.
Postponement Responsibility — 3.10.
Protested Games — 4.19.
Regulation Game — 4.10, 4.11.
(7-inning Games 4.10 (a — Note).
Resuming Play After Dead Ball — 5.11.
Restrictions on Players — No Fraternizing 3.09; Barred from Stands 3.09; Confined to Bench 3.17.
Runner — Entitled to Base 7.01, 7.03; Touch Requirements 7.02, 7.08 (d), 7.10; Runners Advance 7.04, 7.05, 7.06; Reverse Run Prohibited 7.08 (i); Runner Out 7.08, 7.09 (e - m), 7.10, 7.11; Running Out of Line 6.05 (k), 7.08 (a).
Score of Game — 4.11.
Scoring Runs — 4.09, 6.05 (n), 7.07, 7.12.
Spectators — Barred from Field 3.15; Touching Batted or Thrown Ball 3.16.
Strike — 2.00 (See STRIKE and STRIKE ZONE), 6.08 (b).
Substitutions — 3.03, 3.04, 3.05, 3.06, 3.07, 3.08, 4.04.
Suspended Games — 4.12.
Time Limits — 9.04 (a) (7).
Umpire — Rule 9.00.
Inspects Equipment and Playing Lines 3.01; Judge of Playing Conditions 3.10 (c) and (d), 5.10 (a); Controls Ground Crew 3.11; Controls Lights 4.14; Calls "Time" 5.10; Controls Newsmen and Photographers 9.01 (e); Time Limits 9.04 (a) (7); Umpire's Interference 5.09 (b) and (f), 6.08 (d); Touched by Pitch or Thrown Ball 5.08, 5.09 (h), 7.05 (i).
Unsportsmanlike Conduct — 4.06 (b).
Wild Throws — 5.08, 7.05 (g - h - i).

Officially Licensed by the
Babe Ruth League, Inc.

Babe Ruth Awards

Place your orders online at
www.baberuthawards.com

For custom quotes and designs
call Max Evans at 888-627-7666 x333

SUPER SAVINGS

SAVE 5% ONLINE BY USING COUPON CODE BRSALE2

The Official Sporting Goods Store of Babe Ruth League Inc.

www.baberuthstore.com

Anaconda Sports Inc. • (800) 327-0074

EXCLUSIVE DISCOUNTS ARE JUST THE BEGINNING.

Only Nationwide® gives Babe Ruth League members an exclusive discount on auto insurance. As a Babe Ruth League member, you could save with special discounts on auto insurance.

In addition, when you add features like **Vanishing Deductible**®, you can also take $100 off your deductible for every year of safe driving, for a total of $500 in savings.

Call 866-238-1426, visit your local Nationwide® agent or go to nationwide.com/BabeRuthLeague.

Nationwide®

Nationwide may make a financial contribution to this organization in return for the opportunity to market products and services to its members or customers. Products Underwritten by Nationwide Mutual Insurance Company, Columbus, OH 43215. Not all Nationwide affiliated companies are mutual companies, and not all Nationwide members are insured by a mutual company. Subject to underwriting guidelines, review, and approval. Vanishing Deductible is an optional feature. Annual credits subject to eligibility requirements. Max. credit: $500. Details and availability vary by state. Products and discounts not available to all persons in all states. Nationwide, the Nationwide N and Eagles design and Vanishing Deductible are service marks of Nationwide Mutual Insurance Company. © 2014 Nationwide Mutual Insurance Company. AFO-0775AO.1 (10/14)